Sorensen

DCR-B SERIES

1800-Watt
Power Supplies

Instruction Manual

Manual covers DCR-B models:

10-120B	**80-20B**
20-80B	**150-12B**
40-40B	**300-6B**
60-30B	**600-3B**

SORENSEN
Division of Elgar
9250 Brown Deer Road
San Diego, CA 92121-2294
1-800-73ELGAR (733-5427)
Tel: (858) 450-0085
Fax: (858) 458-0267
E-mail: sales@sorensen.com
www.sorensen.com

©1986 by Sorensen, Division of Elgar Electronics Corporation
This document contains information proprietary to Sorensen, Elgar Electronics Corporation. The information contained herein is not to be duplicated or transferred in any manner without prior written permission from Sorensen.

June 1986

Document No. 165041 Rev E

SORENSEN FIVE–YEAR WARRANTY

Sorensen, a division of Elgar Electronics Corporation, warrants its products to be free from defects in material and workmanship. This warranty is effective for five years from the date of shipment of the product to the original purchaser. Liability of Sorensen under this warranty shall exist provided that:

- the Buyer exposes the product to normal use and service and provides normal maintenance on the product;
- Sorensen is promptly notified of defects by the Buyer and that notification occurs within the warranty period;
- the Buyer receives a Return Material Authorization (RMA) number from Sorensen's Repair Department prior to the return of the product to Sorensen for repair, phone 800-458-4258;
- the Buyer returns the defective product in the original, or equivalent, shipping container;
- if, upon examination of such product by Sorensen it is disclosed that, in fact, a defect in materials and/or workmanship does exist, that the defect in the product was not caused by improper conditions, misuse, or negligence; and,
- that Sorensen QA seal and nameplates have not been altered or removed and the equipment has not been repaired or modified by anyone other than Sorensen authorized personnel.

This warranty is exclusive and in lieu of all other warranties, expressed or implied, including, but not limited to, implied warranties of merchantability and fitness of the product to a particular purpose. Sorensen, its agents, or representatives shall in no circumstance be liable for any direct, indirect, special, penal, or consequential loss or damage of any nature resulting from the malfunction of the product. Remedies under this warranty are expressly limited to repair or replacement of the product.

CONDITIONS OF WARRANTY

- To return a defective product, contact a Sorensen representative or the Sorensen factory for an RMA number. Unauthorized returns will not be accepted and will be returned at the shipper's expense.
- For Sorensen products found to be defective within thirty days of receipt by the original purchaser, Sorensen will absorb all ground freight charges for the repair. Products found defective within the warranty period, but beyond the initial thirty-day period, should be returned prepaid to Sorensen for repair. Sorensen will repair the unit and return it by ground freight pre-paid.
- Normal warranty service is performed at Sorensen during the weekday hours of 7:30 am to 4:30 pm Pacific time. Warranty repair work requested to be accomplished outside of normal working hours will be subject to Sorensen non-warranty service rates.
- Warranty field service is available on an emergency basis. Travel expenses (travel time, per diem expense, and related air fare) are the responsibility of the Buyer. A Buyer purchase order is required by Sorensen prior to scheduling.
- A returned product found, upon inspection by Sorensen, to be in specification is subject to an inspection fee and applicable freight charges.
- Equipment purchased in the United States carries only a United States warranty for which repair must be accomplished at the Sorensen factory.

Sorensen

Committed to Quality...Striving for Excellence

TABLE OF CONTENTS

			Page
SECTION 1	INTRODUCTION		
1.1	INTRODUCTION		1-1
1.2	DESCRIPTION		1-1
	1.2.1	General	1-1
	1.2.2	Automatic Crossover	1-1
	1.2.3	Remote Sensing	1-2
	1.2.4	Series Operation	1-2
	1.2.5	Parallel Operation	1-2
	1.2.6	Remote Programming	1-2
	1.2.7	Unit Shutdown Circuit	1-2
	1.2.8	Protection Features	1-2
1.3	OPTIONAL MODIFICATIONS		1-3
1.4	SPECIFICATIONS		1-3
SECTION 2	INSTALLATION		
2.1	GENERAL		2-1
2.2	INITIAL INSPECTION		2-1
2.3	ELECTRICAL INSTALLATION		2-1
2.4	MECHANICAL INSTALLATION		2-1
2.5	ELECTRICAL CHECK		2-2
	2.5.1	Voltage Mode	2-2
	2.5.2	Current Mode	2-2
SECTION 3	OPERATION		
3.1	GENERAL		3-1
3.2	VOLTAGE MODE OPERATION		3-4
	3.2.1	Local Sensing	3-4
	3.2.2	Remote Sensing	3-4
	3.2.3	Resistance Programming	3-6
	3.2.4	Signal Programming	3-8

TABLE OF CONTENTS (Cont'd)

SECTION 3	OPERATION	Page
3.3	CURRENT MODE OPERATION	3-8
	3.3.1 Resistance Programming	3-9
	3.3.2 Signal Programming	3-10
	3.3.3 Alternate Current Programming Method	3-10
3.4	PARALLEL OPERATION	3-12
	3.4.1 Direct Paralleling	3-12
	3.4.2 Master/Slave Paralleling	3-13
3.5	SERIES OPERATION	3-14
	3.5.1 Direct Series connections	3-14
	3.5.2 Master/Slave Connections	3-16
3.6	UNIT SHUTDOWN CIRCUIT	3-18
3.7	OVP	3-18
	3.7.1 OVP Adjustment	3-18
SECTION 4	THEORY OF OPERATION	
4.1	INTRODUCTION	4-1
4.2	PHASE CONTROL PRINCIPLE	4-1
4.3	BLOCK DIAGRAM ANALYSIS	4-3
4.4	DETAILED CIRCUIT DESCRIPTION	4-3
	4.4.1 Reference and Bias Supplies	4-3
	4.4.2 Voltage Mode Section	4-4
	4.4.3 Current Mode Section	4-5
	4.4.4 Ramp Generator, Reset Circuit and Comparator	4-5
	4.4.5 Blocking Oscillator Q2	4-6
	4.4.6 Turn-On and Shut-Down Circuits	4-6
	4.4.7 Power Section	4-6
	4.4.8 Overvoltage Protector	4-7
	4.4.9 Indicator Lamps	4-7

TABLE OF CONTENTS (Cont'd)

		Page
SECTION 5	MAINTENANCE	
5.1	GENERAL	5-1
5.2	PERIODIC SERVICING	5-1
5.3	TROUBLESHOOTING	5-1
5.4	CALIBRATION	5-1
	5.4.1 Current Mode Section, Limit Settings	5-2
5.5	PERFORMANCE TESTING	5-3
	5.5.1 Voltage Mode Regulation and Ripple	5-3
	5.5.2 Current Mode Regulation	5-4
	5.5.3 Transient Response	5-4
5.6	HI-POT TEST PROCEDURE	5-5
SECTION 6	DRAWINGS AND PARTS LISTS	
6.1	GENERAL	6-1
6.2	PARTS LIST COLUMN HEADINGS DEFINED	6-1

LIST OF ILLUSTRATIONS

Figure	Title	Page
3-1	DCR-B Controls and Indicators	3-2
3-2	Control PCB Barrier Strip Connections	3-3
3-3	Remote Sensing Connections	3-5
3-4	Illustration of Load Lead Resistance (Remote Sensing)	3-6
3-5	Voltage Mode Programming Connections	3-7
3-6	Current Mode Programming Connections	3-9
3-7	DCR-B Interconnections (Current Programming)	3-11
3-8	Direct Parallel Connections	3-13
3-9	Master/Slave Connections, Parallel Operation	3-14
3-10	Direct Series Connections (Remote Sensing)	3-15
3-11	Master/Slave Connections, Series Operation	3-16
4-1	Phase Control Firing Angles	4-1
4-2	DCR-B Functional Block Diagram	4-2
4-3	Passing Stage Principle	4-4
5-1	Performance Test Setup	5-3
6-1	DCR-B PCB Schematic Diagram	6-2
6-2	PCB Component Location Diagram	6-4
6-3	Component Layout, Typical Assembly	6-5
6-4	DCR 10-120B Schematic Diagram	6-6
6-5	DCR 20-80B Schematic Diagram	6-7
6-6	DCR 40-40B Schematic Diagram	6-8
6-7	DCR 60-30B Schematic Diagram	6-9
6-8	DCR 80-20B Schematic Diagram	6-10
6-9	DCR 150-12B Schematic Diagram	6-11
6-10	DCR 300-6B Schematic Diagram	6-12
6-11	DCR 600-3B Schematic Diagram	6-13
6-12	OVP PCB Schematic and Component Location	6-19
6-13	DCR-B Outline Drawing	6-21

LIST OF TABLES

Table	Title	Page
1-1	Specifications	1-4
3-1	Front Panel Controls and Indicators	3-2
3-2	RA/RB Values--Two Identical DCR-B Units Series Connected.	3-17
3-3	Recommended Rectifiers, Series Operation	3-17
5-1	DCR-B Troubleshooting	5-2
5-2	Sensing Resistor Values (Current Mode Regulation Check)	5-5
5-3	Unit Calibration Specifications	5-5
6-1	Replaceable Parts List, DCR-B PCB Assembly	6-3
6-2	Replaceable Parts List, DCR-B Main Assembly 1800 Watt Series	6-14
6-3	Replaceable Parts List, DCR-B OVP	6-20

SECTION 1
INTRODUCTION

1.1 INTRODUCTION

This manual contains operation and maintenance data on the 1800 watt units of the DCR-B series Sorensen Power Supplies. It is intended to familiarize the user with the functioning of the unit, to introduce the varied applications to which the unit may be adapted, and to furnish sufficient maintenance data to assure long operating life.

Six major sections form the manual divisions. Section 1 contains a brief functional description of the DCR-B series power supplies. Initial inspection and checkout procedures are outlined in section 2. Operating instructions, including methods for adapting units to various applications, comprise section 3. Sections 4 and 5 provide the principles of operation and maintenance procedures respectively. System drawings and the replacement parts list are provided in section 6.

1.2 DESCRIPTION

1.2.1 General

Designed for either bench or rack use, the typical DCR-B power supply provides a highly regulated, precise dc output, adjustable over a wide range. It operates from a nominal 115 Vac (208/220/230 Vac inputs are available as options) and exhibits a rapid response to transients, both load and line.

DCR-B series supplies are phase controlled type with SCR's (Silicon Controlled Rectifiers) or Triacs at the input to the transformer, followed by a passive LC filter. This design allows for a wide range of output voltages, simplicity of design, and offers large amounts of regulated power at relatively high efficiencies compared to linear regulators.

Silicon type semiconductors are used extensively in DCR-B circuitry, and contribute significantly to the units' wide ambient temperature range characteristic. Low dissipation transistors and diodes are located on a single printed circuit board while high dissipation devices are heat sinked to aluminum brackets and heatsinks.

All controls used during normal operation, except the OVP control, are mounted on the front panel. These include a power circuit breaker, FINE and COARSE VOLTAGE adjust potentiometers, and FINE and COARSE CURRENT adjust potentiometers. The system output is taken across a terminal pair at rear terminal strip TB2.

A variety of Sorensen power supply application notes are available through your Sorensen Service Representative. These notes detail many hook-up configurations and special usages available to meet most power supply applications.

1.2.2 Automatic Crossover

There are two basic operating modes, voltage and current. In the voltage mode, the voltage is held constant while the current varies with the load. In the cur-

rent mode, the voltage varies, and current is held constant. The automatic crossover feature enables the unit to switch operating modes as a function of load requirements. If, for example, load current attempts to increase above a preset current limit, the unit will switch operation automatically from the voltage to the current mode. In this mode, the current will be regulated at the value preset on the front panel. If load requirements are lowered, return to the voltage regulating mode will occur automatically. Two red panel lamps indicate whether operating in the voltage or current mode.

1.2.3 Remote Sensing

Terminals located on rear-mounted terminal board TB3 offer a means of extending a unit's regulating point from the output terminals to the load. This effectively compensates for variations in the load lead voltage drop. Section 3 outlines the connections for remote sensing.

1.2.4 Series Operation

For applications requiring output voltages higher than a single unit can provide, DCR-B power supplies may be connected in series (see Section 3). Regulation in series operation is the sum of the regulations for all units.

1.2.5 Parallel Operation

Parallel operation may be used to service those applications requiring an output current higher than a single supply can provide. Using a master/slave approach, a maximum of four units can be connected in parallel. An alternate method is direct paralleling. With this approach, there is no limit to the number of units which can be paralleled. The regulation will deteriorate, and will be the sum of the regulations for the individual settings plus the output voltage differences between units at no load.

1.2.6 Remote Programming

Output voltage or current of DCR-B power supplies may be remotely programmed in either the voltage or current mode by resistance or voltage signal. Details and considerations are given in Section 3.

1.2.7 Unit Shutdown Circuit

In the DCR-B line, application of the plus (+) sense (terminal 1 of TB3) to the shutdown terminal (terminal 11 of TB3) instantly shuts down the supply. This function can provide unit protection by connecting a temperature or voltage sensitive switch (or transistor) in this line to shut the system down under specified conditions. An example is in the master/slave connection of two DCR-B power supplies (refer to section 3, Operating Instructions). If the shutdown function is adapted to the master unit, the system output goes to zero; if applied to the slave unit, only that unit is affected and the system output is reduced accordingly.

1.2.8 Protection Features

Protection against the effects of overloads and internal short circuits is provided. Overload protection is inherent in automatic crossover. The main power circuit

components are protected by the unit circuit breaker. Control circuitry is protected by a fuse on the rear.

In the event of an overvoltage condition at the output, such as a failure in the power supply or an externally induced condition, an overvoltage electronic crowbar is actuated by an integral OVP sensing circuit. The crowbar acts to quickly reduce the output voltage to zero. (See details in Section 3).

1.3 OPTIONAL MODIFICATIONS

The standard DCR-B unit is designed for operation from a nominal 115 Vac input; however, units may be purchased factory modified to accept inputs of 208, 220 or 230 Vac (modifications M1, M2 or M3 respectively).

The sides of the DCRB have inserts to allow attachment of slide rails. Consult the factory for information on these optional slide rails.

1.3 SPECIFICATIONS

The specifications for the DCRB 1800 watt series power supplies are given in Table 1-1.

SECTION 2
INSTALLATION

2.1 GENERAL

After unpacking, perform initial inspections and preliminary electrical check procedures to assure that the unit is in good working order. If it is determined that the unit is damaged, the carrier should be notified immediately. Repair problems should be directed to the nearest Sorensen representative, or to the factory.

2.2 INITIAL INSPECTION

Proceed as follows to inspect for damage incurred during shipment:

1. Inspect panel and chassis for scratches, dents and chips.
2. Turn front panel voltage and current controls from stop to stop. Rotation should be smooth through a 300 degree rotation.
3. Check meter faces for cracked or broken windows. Check each meter pointer for zero indication. If necessary, use adjust screw to bring indicator to zero.
4. Look for cracked or broken lenses on indicating lights.
5. Alternate power switch between ON and OFF. Action should be both positive and audible. Return switch to OFF position.
6. Remove rear cover, and check terminal board. Make sure that links are firmly in place across terminals 3-4, 5-6, 7-8. Check the fuse.
7. Remove top cover retaining screws. Inspect components and printed circuit board for damage.

2.3 ELECTRICAL INSTALLATION

Standard units are shipped ready for use with nominal 115 Vac input, but may be factory or field modified to operate from a nominal 208, 220 or 230 volt input. (M1, M2, and M3 options respectively).

Input power connections are made to the INPUT terminal board (TB1) at the rear of the supply. Connect No. 12 wires to the terminals; high line to AC (1), low to AC (common) (3) and ground wire to the center (GND) (2) terminal. (See Figures 6-4 through 6-11).

2.4 MECHANICAL INSTALLATION

The unit, as received, is ready for bench use. To adapt for rack mounting, simply remove feet and reinstall the feet retaining screws. As the unit is convection cooled, and the feet normally allow air to enter through the bottom, care must be taken when rack mounting to assure free air flow.

CAUTION

During installation, if two or more supplies are to be rack mounted or otherwise stacked, the operating ambient temperature of the upper units should not exceed 71°C/160°F. Output current must be derated according to specifications for ambient temperatures above 40°C/104°F.

2.5 ELECTRICAL CHECK

2.5.1 Voltage Mode

To check voltage mode operation, proceed as follows:

1. Set POWER switch to OFF. Connect input as per paragraph 2.3.
2. Turn COARSE and FINE VOLTAGE controls fully counterclockwise; turn COARSE and FINE CURRENT controls fully clockwise.
3. Set unit power switch to ON with zero load current.
4. Turn COARSE VOLTAGE control slowly clockwise while observing the unit voltmeter. The pointer should swing upscale, and the voltage indicator light should be ON.
5. With the pointer at half scale, rotate the FINE VOLTAGE control from stop to stop. The voltage should vary approximately 0.4% of maximum output voltage.

2.5.2 Current Mode

1. With unit power OFF, turn COARSE and FINE CURRENT controls fully counterclockwise. Set COARSE VOLTAGE control to its mid position.
2. Connect a wire, of sufficient gauge to handle full output current, across the output terminals.
3. Set unit power to ON. The CURRENT mode indicator will illuminate.
4. Rotate COARSE CURRENT control slowly clockwise until a current indication appears. Continue clockwise rotation; the meter indication will increase accordingly.
5. Set unit power to OFF, and remove shorting wire.

SECTION 3
OPERATION

3.1 GENERAL

This section provides basic operating instructions, and details the methods by which DCR-B power supplies may be adapted to their more common applications including remote sensing, remote programming, and series and parallel operation. Table 3-1 identifies the operating controls shown in Figure 3-1, and describes their functions.

WARNING

Full system voltage appears across the unit output terminals. Follow operating procedures exactly and do not make terminal board or load terminal alterations with unit power ON.

High voltage output and loss of current limiting can result from loosening or removing links on rear mounted terminal board TB3. This may result in personal injury and damage to equipment. Do not remove or loosen any links unless specifically instructed in the following procedures.

CAUTION

This unit contains an integral OVP device. This device places a short circuit across the output terminals when the OVP trip level setting is exceeded. If the load contains large capacitors or an active load (such as a battery), the stored energy in the load will be discharged into the OVP device. This discharge may injure the OVP and/or the load. Connect a series diode in the negative load lead to block the load discharge. This precaution must be taken to prevent energy stored in the external device or load being absorbed by the OVP crowbar SCR. See Figures 3-8, 3-9, and Table 3-3 for typical diode connection and types.

Table 3-1 Front Panel Controls and Indicators

CONTROL/INDICATOR	FUNCTION
POWER switch (CB1)	A 125-volt, 50 ampere circuit breaker used to connect or disconnect input line voltage.
POWER indicator (DS1)	A white light connected across the primary of input transformer T2. Illuminates when the unit POWER switch is in the ON position.
Panel voltmeter (M1)	A meter connected internally across the sense terminals, to indicate unit output voltage.*
COARSE VOLTAGE adjust (R10)	A 12K ohm potentiometer across which the reference voltage for voltage-mode operation is developed. Used to adjust the output voltage.
VOLTAGE mode indicator (DS2)	A red light which illuminates when the unit is operating in the voltage-regulating mode.
FINE VOLTAGE adjust and FINE CURRENT adjust (R11/R14)	80 ohm potentiometers connected in series with the COARSE VOLTAGE and CURRENT potentiometers, used to make slight variations in the output voltage or current.
COARSE CURRENT adjust (R13)	A 650 ohm potentiometer used in the first stage of the current-mode amplifier to vary the reference, and subsequently the output current.
CURRENT mode indicator (DS3)	A red light which illuminates when the unit is operating in the current regulating mode.
Panel current meter (M2)	A meter connected in series with the positive output, to indicate unit output current.

*In local sense mode only; when remote sensing is used, indicates voltage across load.

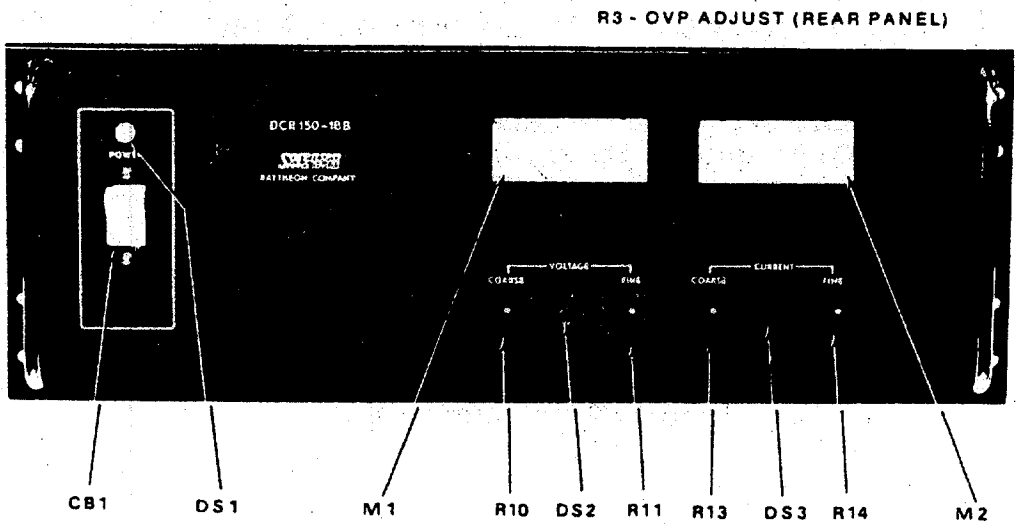

Figure 3-1 DCR-B Controls and Indicators

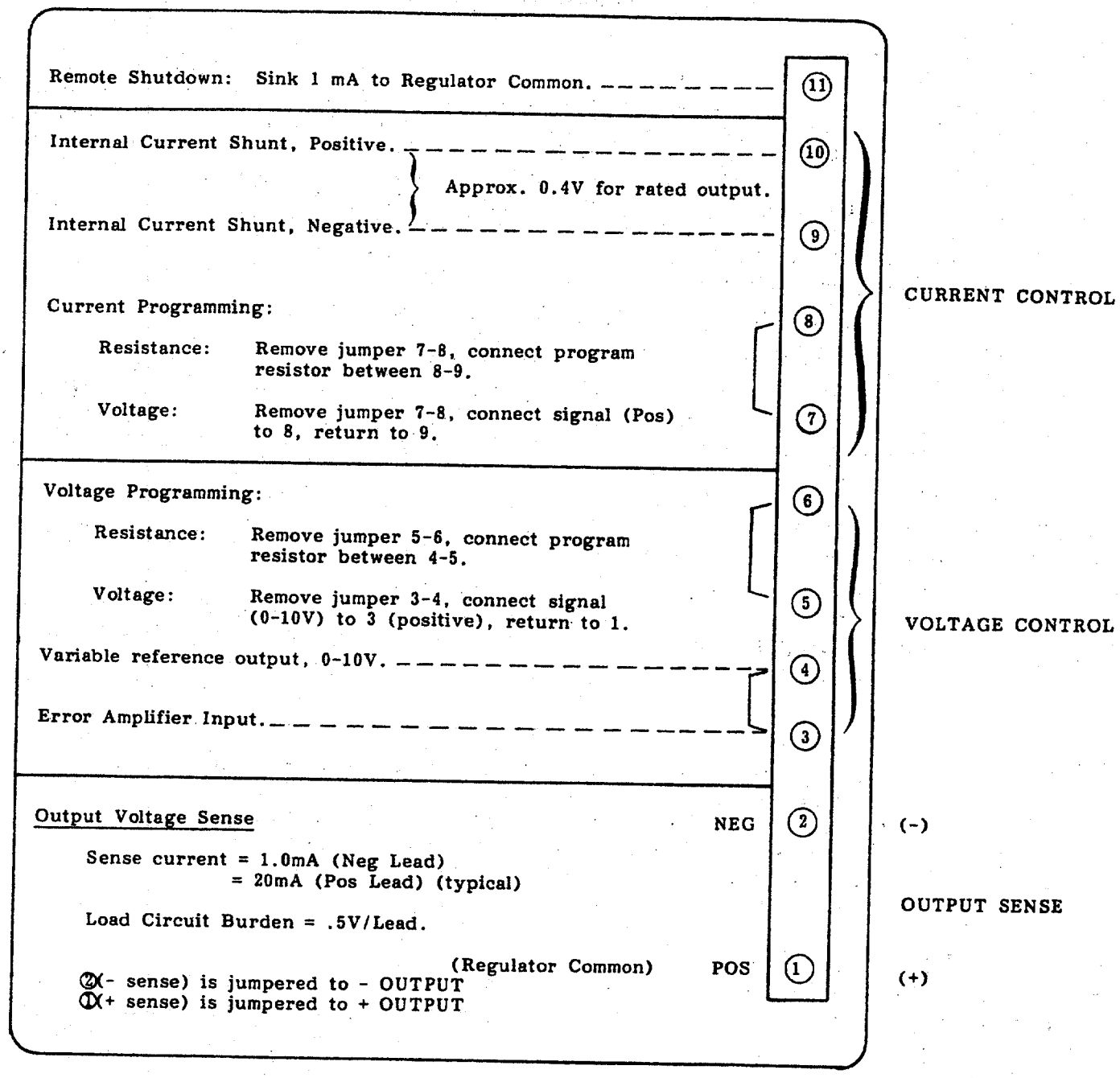

Figure 3-2 Control PCB Barrier Strip Connections

3.2 VOLTAGE MODE OPERATION

3.2.1 Local Sensing

DCRB series units are shipped ready for use in the local sensing configuration, that is, with unit regulation occurring at the output terminals. Local sensing is usually acceptable for applications where the load current is nearly constant (or when large output conductors are used). In special applications (where load regulation is critical), remote sensing may be used (see para. 3.2.2). To operate unit in the voltage mode and local sensing configuration, proceed as follows:

1. Rotate the VOLTAGE controls fully counterclockwise, and the CURRENT controls fully clockwise.
2. With unit power OFF, connect appropriate input voltage.
3. Set unit power to ON. Power light will illuminate.
4. Rotate COARSE VOLTAGE control until the unit voltmeter indicates the desired output voltage. Use FINE VOLTAGE control for small adjustments.
5. Set unit power to OFF.
6. Remove rear cover and connect load lines to output terminals. Replace cover.
7. Set unit power to ON, and turn CURRENT control to the desired current limiting value. POWER light will illuminate, and the unit is in voltage mode operation.

NOTE

With unit in the voltage mode, an increase in load current requirements above the value set in step 7 will cause an automatic crossover to the current mode (current limiting). The current mode indicator DS3, will illuminate when this occurs.

3.2.2 Remote Sensing (Figure 3-3)

In the remote sensing condition, voltage regulation is at the load rather than at the unit output terminals. This compensates for voltage drop variations in the load lines.

NOTE

Voltage drop should not exceed 3 volts maximum per load lead, 1 volt maximum on 150 to 600V models. Voltage across the load is equal to voltage output of the unit minus line drops.

On high voltage models (150 to 600V), the 3V drop in the external load lines may cause damage to the DCR control amplifier under load short circuit conditions. A large portion of the rated output voltage is dropped across the load lines under the load short condition, and this high voltage will enter the amplifier causing

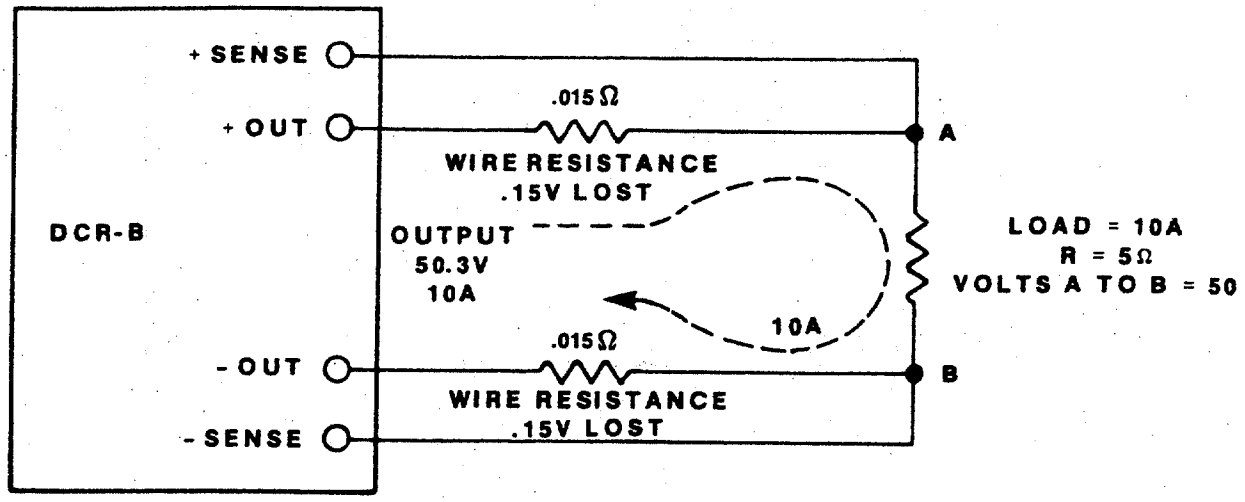

Figure 3-4 Illustration of Load Lead Resistance (Remote Sensing)

To adapt unit for remote sensing operation, proceed as follows:

1. With no load on the unit, apply input power and set output voltage to the desired value; then set POWER switch to OFF.
2. Remove rear cover and disconnect red and black wires going from the plus and minus output terminals to the plus and minus sense terminals.
3. Run output lead from the load, through the holes in the rear cover, to the plus and minus output terminals.
4. Connect sensing leads from plus sense and minus sense terminals to the load. Observe Polarity. To reduce stray pickup, use shielded cable (shield grounded at the supply) or a twisted pair of wires for sensing leads.
5. Replace the rear access cover and set POWER switch to ON.

3.2.3 Resistance Programming Voltage Mode (Figure 3-5)

The output voltage of any model in the DCR-B series may be controlled from remote locations by connecting a resistance (fixed or variable) into the voltage mode amplifier reference circuit. Terminals on rear terminal board TB3 are provided for this purpose.

The ohms/volt sensitivity for each unit is listed in the specifications (para. 1.4). The programming resistor should have a low temperature coefficient (±30 ppm), and should dissipate approximately 10 milliwatts. Programming current is approximately 1.0 milliampere. If changes in the programmed output are to be made by

damage. For this reason, it is recommended that remote sensing be avoided, or that the external line drop not exceed 1 volt per load line on the 150 to 600 Vdc models.

Note that a heavy pulse load can act the same as a momentary load short, and may damage the amplifier under remote sense conditions.

Consult the factory for recommendations if you intend to use remote sense under load shorting (or pulse loading) conditions.

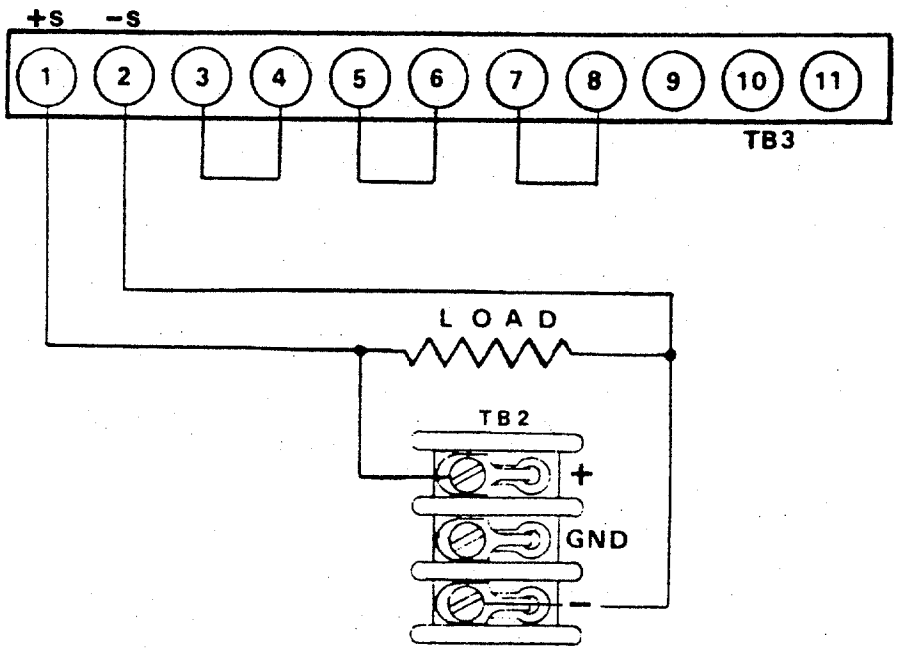

Figure 3-3 Remote Sensing Connections

abrupt changes in programming resistance, make before break switching should be used.

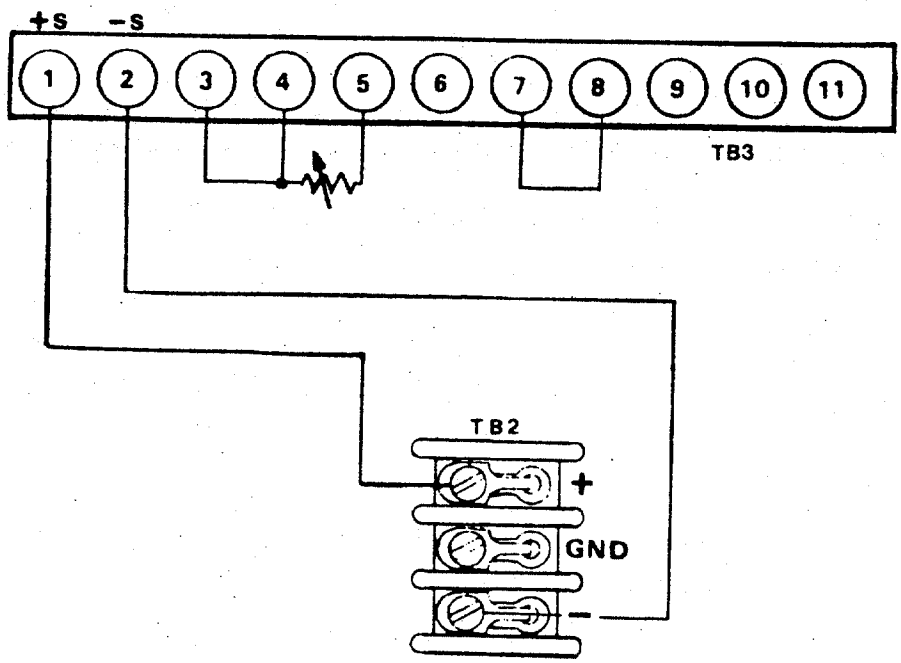

Figure 3-5 Voltage Mode Programming Connections

To adapt unit to resistance programming operation, proceed as follows:

1. Set unit power to OFF.
2. Remove link between terminals 5 and 6, and connect a programming resistor between terminals 4 and 5 (Figure 3-5). Use shielded or twisted wire for interconnecting leads.
3. Rotate COARSE and FINE VOLTAGE controls fully counterclockwise. Set POWER switch to ON.
4. Rotate CURRENT controls to desired limiting value. Remove input power, and connect load to output terminals.
5. Set POWER switch to ON. Unit will now supply programmed voltage to load.

CAUTION

If programming operation is to be discontinued, set POWER switch to OFF, remove programming resistor, and reconnect link between terminals 5 and 6.

NOTE

Panel controls are disabled when unit is connected in this way.

3.2.4 Signal Programming Voltage Mode

A fixed or variable voltage signal may be fed into the voltage mode amplifier circuit to provide a fixed or variable voltage output. The selected signal source output should be floating, unless the positive output of the supply is grounded. The required signal is 0-10V capable of sourcing 1 mA. Proceed as follows:

1. Set POWER switch to OFF.
2. Remove link from between terminals 3 and 4 of TB3.
3. Connect the signal source between terminals 3 and 1 of TB3. Observe Polarity (positive end to terminal 3). Signal level should not exceed 10 volts.

CAUTION

If programming voltage exceeds 10V, excessive voltage could occur which can damage the unit.

3.3 CURRENT MODE OPERATION

In current mode operation, the current output is regulated at the value determined by the setting of the current controls. The output voltage varies as a function of load. To operate unit in the current mode proceed as follows:

1. Rotate FINE and COARSE VOLTAGE controls fully counterclockwise, and adjust COARSE CURRENT control approximately three quarters clockwise.
2. Set POWER switch to ON.
3. Rotate COARSE VOLTAGE control clockwise until unit voltmeter indicates the desired voltage limit.
4. Set POWER switch to OFF.
5. Connect load to output terminals. Observe Polarity.
6. Set POWER switch to ON, and turn CURRENT controls to desired current regulation setting. POWER and CURRENT MODE lights will illuminate, and unit will deliver constant, regulated current to load.

NOTE

Any output instability (such as oscillations due to inductive loading) can be eliminated by adjusting potentiometer R45 on the unit PCB.

If voltage increases above the limit set in step 3 preceding, unit will automatically cross over to voltage mode operation.

3.3.1 Resistance Programming Current Mode (Figure 3-6)

DCR-B supplies may be programmed externally to provide output current. This is done by inserting a fixed or variable resistance into the current mode amplifier reference circuit. The programming resistor selected should have a low temperature coefficient (±30 ppm) and should dissipate approximately 0.5 milliwatt. Programming current is approximately 1.0 milliampere.

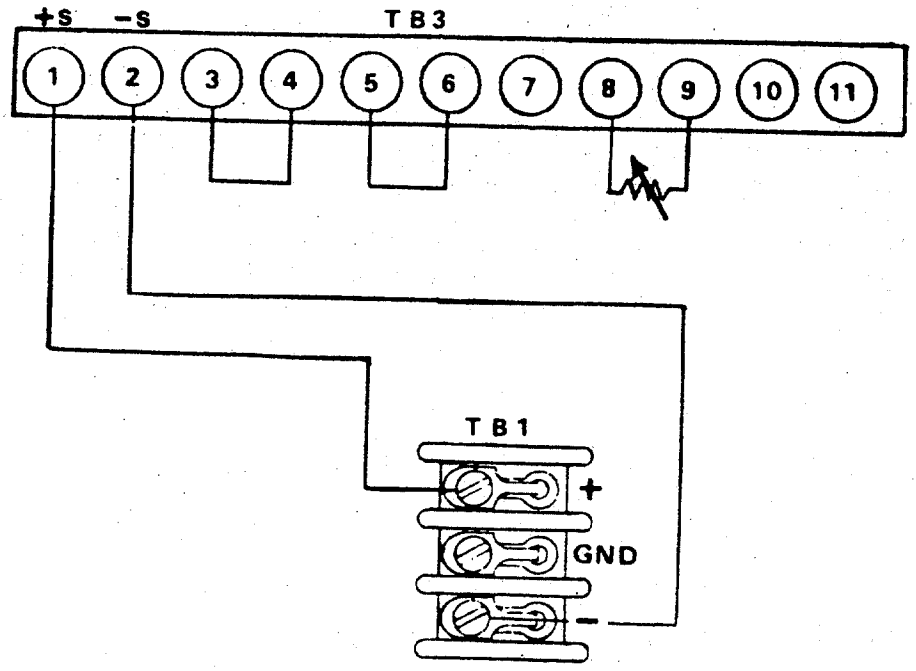

Figure 3-6 Current Mode Programming Connections

To adapt unit to the current mode, resistance programming configuration, proceed as follows:

1. With unit power OFF, remove the link between terminals 7 and 8, and rotate VOLTAGE controls to mid position.
2. Insert programming resistor between terminals 8 and 9.
3. Adjust COARSE VOLTAGE control until unit voltmeter indicates desired voltage limit value.
4. Set POWER switch to OFF and connect load leads to output terminals. Observe Polarity.
5. Set POWER switch to ON. POWER and CURRENT mode indicators will illuminate.

CAUTION

If resistance programming is to be discontinued, set POWER switch to OFF, remove programming device, and reconnect link between terminals 7 and 8.

3.3.2 Signal Programming Current Mode

The procedure for adapting a DCR-B unit to current mode signal programming is identical to that for current mode resistance programming except that the signal source, (488 DAP or equivalent) rather than a programming resistor, is connected across terminals 8 and 9. A floating (ungrounded) signal source capable of sinking approximately 1.0 mA should be selected, and twisted wires should be used for the interconnecting leads. For a full range variation in unit output current, signal must have 0 to 400 mV range. Terminal 8 is positive.

CAUTION

Do not apply more than 400 mV to the DCR-B, as the DCR-B current limit will be dangerously high.

3.3.3 Alternate Current Programming Method

This alternate programming method is recommended for the DCR-B power supply. These models are designed to accept control inputs of 400 mV. This diode isolated current sink method, while somewhat more complex to implement, provides a maximum current limit of 115% regardless of inadvertent errors in control input.

Figure 3-7 illustrates unit interconnection for the DCR-B power Supply Series.

3.3.3.1 Calibration Procedure

1. Turn signal source ON, DCR-B power OFF.
2. Program signal source to zero output voltage.
3. Set the DCR-B panel voltage control fully clockwise (or to desired voltage limit).
4. Short the DCR-B output terminals and apply DCR-B input power.
5. Set zero current adjust potentiometer R53 on the DCR-B PCB to the point where the output current just drops to zero.

NOTE

A small positive current is desirable to insure that the zero is not set too low.

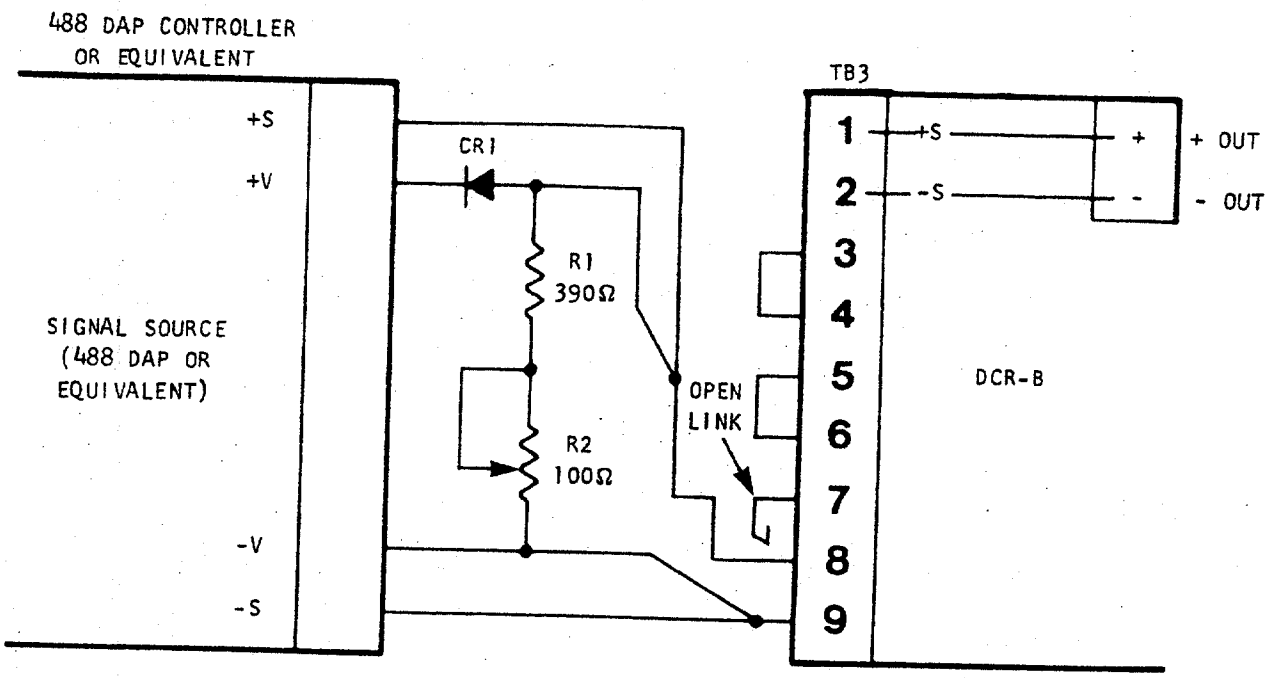

R1 = 390Ω, 1/4W, 2%, 100 PPM
R2 = 100Ω, 1/2W, TRIMPOT, CERMET, 100 PPM OR BETTER
CR1 = 1N6263 SCHOTTKY DIODE ,

Figure 3-7 DCR-B Interconnections (Current Programming)

6. Set signal source and DCR-B power OFF.
7. Disconnect the signal source from terminals 7 and 8 of the DCR-B. Short DCR-B output.
8. Turn DCR-B power ON.
9. Set external pot (R2 in Figure 3-7) to obtain 115% of rated DCR-B output current.
10. Turn DCR-B power OFF.
11. Reconnect the signal source connections removed in step 7.
12. Turn the signal source and the DCR-B power ON.
13. Set the signal source for 400 mV output.
14. Vary the signal source output slightly until the rated full scale dc output current of the DCR-B is obtained. (e.g., DCR-40B may require 385 mV for 40A output).

15. Using output voltage obtained in step 13 to calculate the program constant (Amps output per control supply input). For example: Assume that a voltage of 385 mV is required to obtain a full 40A output. The formula would be as follows:

$$\text{PROGRAM CONSTANT} = \frac{\text{DCR-B Amps Out}}{\text{Signal Source mV Out}} = \text{Amps/mV}$$

$$\text{(e.g.)}\ \frac{40\text{A}}{385\ \text{mV}} = 0.1039\ \text{Amps/mV}$$

16. Remove DCR-B output short.

Overvoltage from the signal source will only produce 115% of rated output current.

3.4 PARALLEL OPERATION

DCR-B single phase units may be paralleled using either of two methods. One method uses a master/slave approach, and the other involves direct paralleling. Each method has its advantages. In master/slave operation the output voltage regulation is maintained, but only four units may be paralleled; with the direct method, there is no limit to the number of units which may be paralleled and no current derating is required. Output voltage regulation, however, does deteriorate.

3.4.1 Direct Paralleling (Figure 3-8)

The following steps outline the procedure for connecting two units in parallel (the same procedure may be extended to parallel as many units as desired):

1. At no load, adjust individual unit voltages to desired system output. Attempt to match individual unit outputs with FINE VOLTAGE controls.
2. Set power on each unit to OFF, and run load leads from units to load. Observe Polarity.
3. If remote sensing is to be used, connect sensing leads from units to load, also observing polarity. Use twisted wire or shielded pair for leads.
4. Set each unit POWER switch to ON.

The unit supplying the highest voltage will supply the load, as it is impossible to identically match the output voltages. If the load requirements exceed the setting on the CURRENT control, this unit will automatically cross over to current mode operation, and its output voltage will drop. The second unit will then assume that portion of the load rejected by the first. Any further increases in load will be supplied by the second unit up to its current limit setting. Regulation, therefore, will be the sum of the regulations of the units plus the difference in the voltage settings.

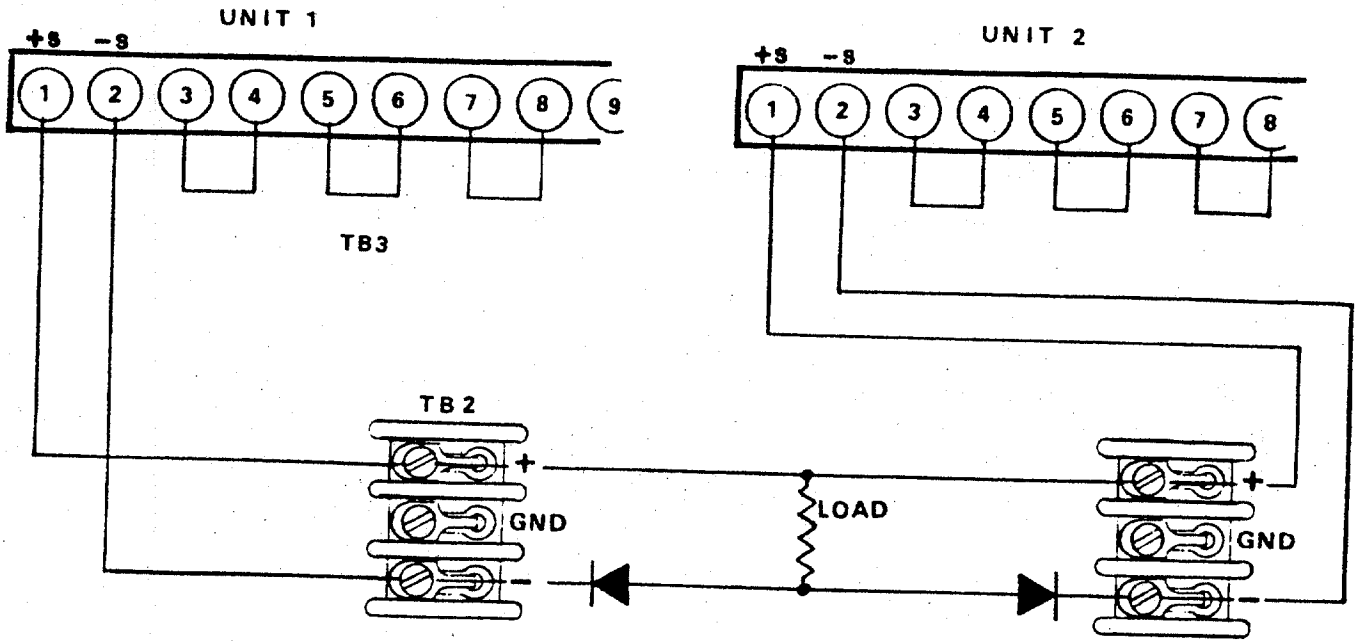

For remote sensing, connect both unit + and - terminals directly to the load instead of output terminal board. OBSERVE POLARITY. Forward diode types listed in Table 3-3 for series connection will be adequate. Heatsinking is also necessary.

Figure 3-8 Direct Parallel Connections

3.4.2 Master/Slave Paralleling (Figure 3-9)

To connect two units in parallel, proceed as follows:

NOTE

Up to three slave units may be added by extending this procedure.

1. With no load applied, set master unit POWER switch to ON, and adjust voltage to desired system output (plus total load lead drop unless in the remote sensing mode). Set unit power to OFF.
2. Connect load leads from both units to the load. If possible, use load leads of approximately equal length. Observe Polarity.
3. Disconnect link between terminals 7 and 8 on slave unit. Set slave voltage controls fully clockwise. Connect a wire between terminal 8 of the slave unit and terminal 10 of the master unit.

4. Set master unit POWER switch to ON, and then set the slave unit POWER switch to ON.

5. Adjust control R53 (on Control PCB) to balance the output currents between the paralleled units.

   Note that the units should be adjusted for equal output currents using the heaviest load (i.e., with both units operating near full load rating).

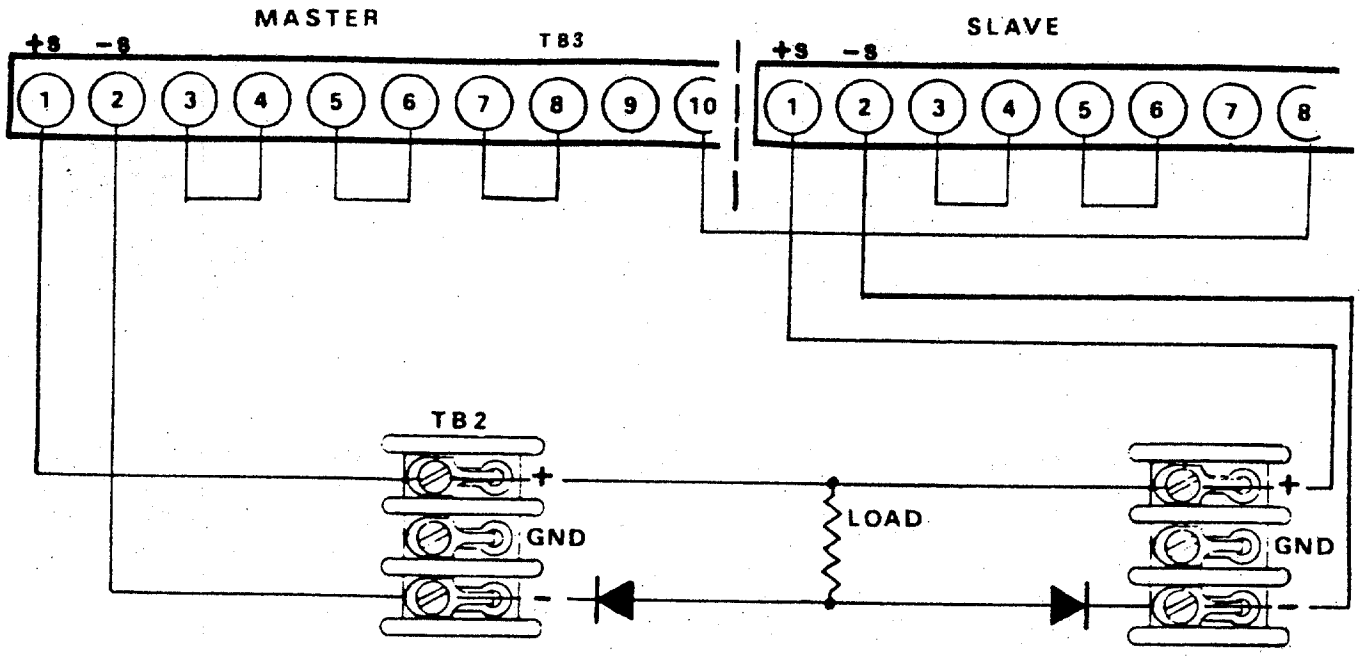

Forward diode types listed in Table 3-3 for series connection will be adequate. Heatsinking is also necessary.

Figure 3-9 Master/Slave Connections, Parallel Operation

3.5 SERIES OPERATION

3.5.1 Direct Series Connections (Figure 3-10)

DCR-B supplies may be directly series connected up to a total output of 200 Vdc (150/300/600 volt models, two in series). System regulation is the sum of the regulations of all units.

The procedure is outlined for connecting two units in series. Additional units may be connected by repeating the procedure for each.

NOTE

Series connected units may be adapted to resistance or signal programming. Be sure programming device is isolated from ground sufficiently to withstand maximum series operating potential.

1. With no load connected, set each unit to its desired output voltage level, and appropriate current limiting value.

2. Set the POWER switch of each unit to OFF.

3. Interconnect units as shown in Figure 3-10.

CAUTION

Rectifiers (and heat sinks where required) must be connected across the output terminals of each unit as shown in the figure. This will prevent damage to the output capacitors. Specific rectifier types are listed in Table 3-3.

---

4. Set unit power switches to ON. Units operate with independently adjustable outputs, and the power to each may be set ON or OFF separately.

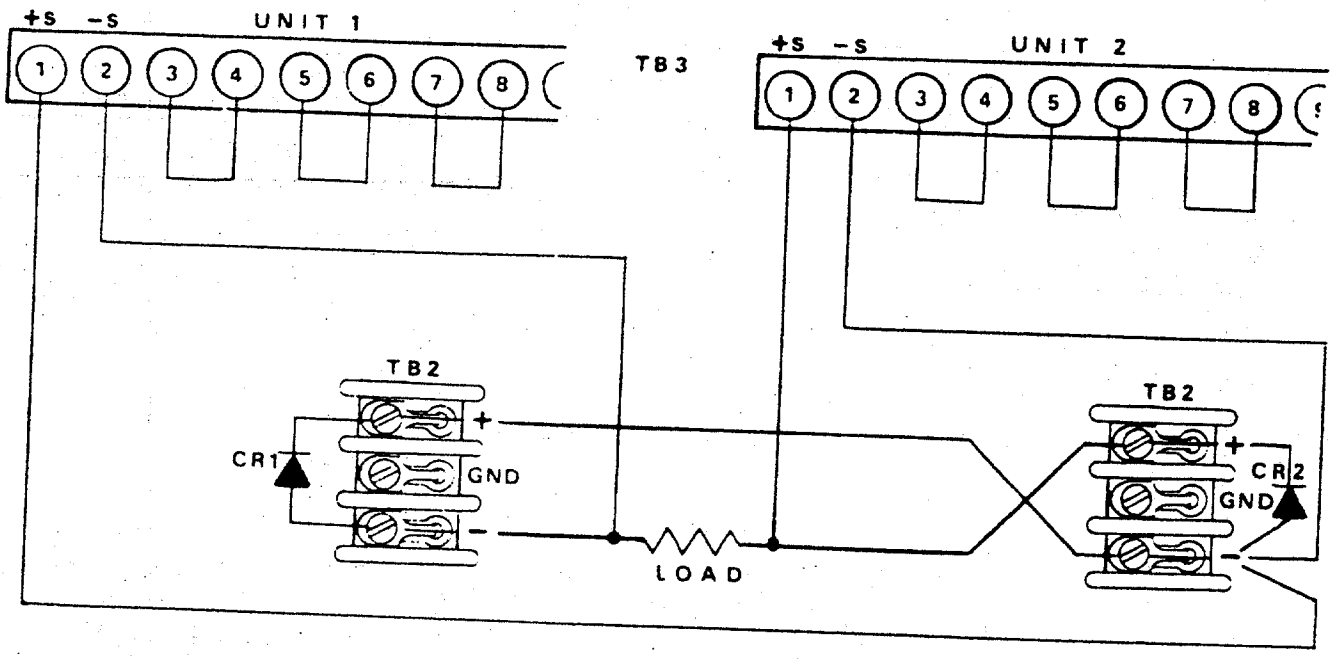

See Table 3-3 for diode values

Figure 3-10 Direct Series Connections (Remote Sensing)

3.5.2 Master/Slave Connection (Figure 3-11)

The voltage range of a DCR-B power supply system can be increased by series -connecting units up to a total rated output of 200 Vdc (150/300/600 volt models, two in series) in a master/slave configuration. Two 40 volt supplies thus connected provide 0 to 80 volt range capability with voltage programming necessary only on one unit. External components required are two wire-wound resistors (RA and RB in the figure), a 15 uF bypass capacitor to eliminate noise feedthrough and a shunt power rectifier across the output terminals of each unit.

Assuming two supplies with the same output ratings are to be used, (consult factory for connecting dissimilar units), connect as shown in Figure 3-11. RA and RB are low TC, wire-wound resistors of 5 watts rating or greater. Resistance values for two identical units in series have been calculated for all voltage ranges in the DCR-B series, and are summarized in Table 3-2. Recommended types of power rectifier are listed in Table 3-3 for each application.

NOTE

For more than two units (with identical output ratings) connected in series, RB remains 10K, and RA is calculated using the formula:

RA = 103 (Vo - 10)/X

where Vo is the voltage of the master supply, and X is the number of units in the system.

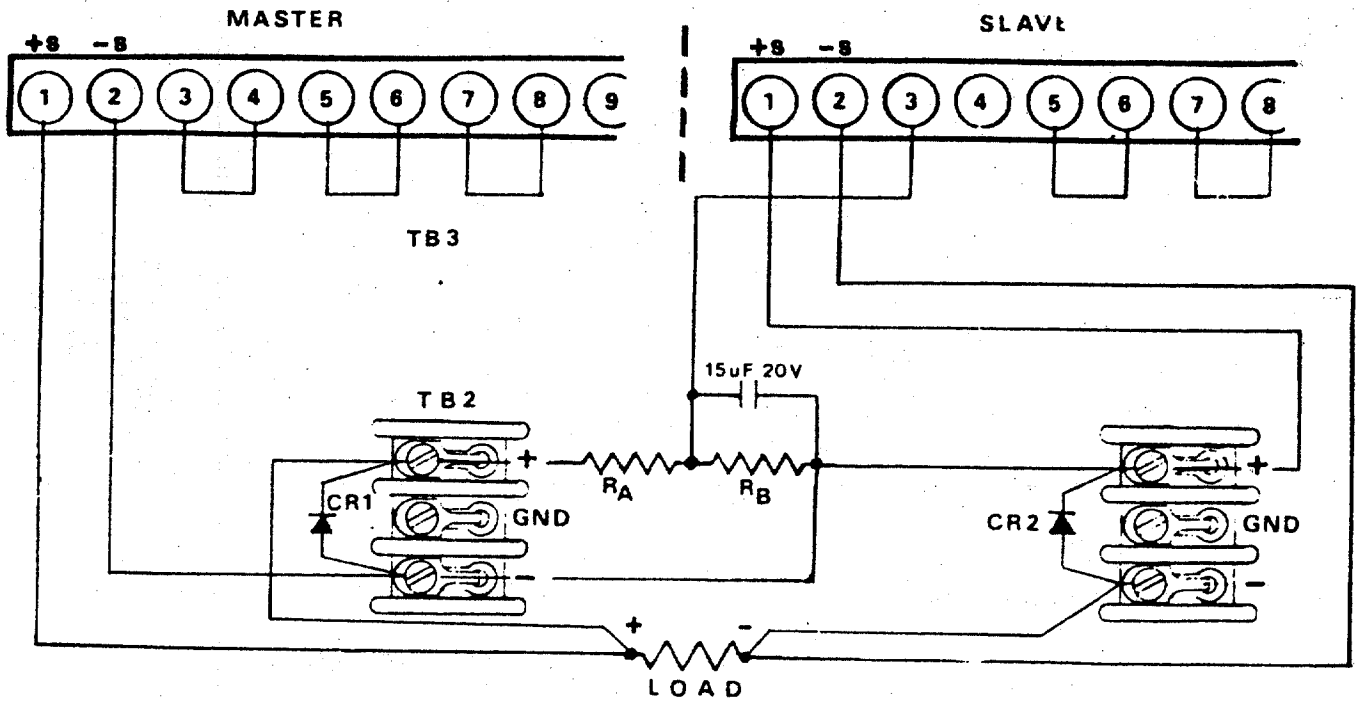

See Table 3-2 for resistor values
See Table 3-3 for diode values

Figure 3-11 Master/Slave Connections Series Operation

Table 3-2 RA/RB Values--Two Identical DCR-B Units Series Connected

(V) RATED	RA	RB
10*	Open	Open
20	5K	10K
40	15K	10K
60	25K	10K
80	35K	10K
150	70K	10K
300	145K	10K
600	295K	10K

*For 10 volt units, terminal 3 of the slave unit is connected directly to the plus (+) sense terminal of the master unit.

Table 3-3 Recommended Rectifiers, Series Operation

DCR Model	Mfr.-Type	Sorensen Part No.	Heatsink** Dim. Inches (mm)
10-120B	IR - 1N4587 1N4587R*	587571-1 587571-3	10 x 10 x 1/8 (254) x (254) x (3)
20-80B	IR - 1N4587 1N4587R*	587571-1 587571-3	8 x 8 x 1/8 (203) x (203) x (3)
40-40B	IR - 1N4587 1N4587R*	587571-1 587571-3	5 x 5 x 1/8 (127) x (127) x (3)
60-30B	GE - 1N1184A 1N1184AR*	587382-2 587382-7	4 x 4 x 1/8 (102) x (102) x (3)
80-20B	GE - 1N1184A 1N1184AR*	587382-2 587382-7	3-1/2 x 3-1/2 x 1/8 (89) x (89) x (3)
150-12B	GE - 1N1202A 1N1202AR*	587393-2 587393-6	3 x 3 x 1/32 (76) x (76) x (.8)
300-6B	GE - 1N1204A 1N1204AR*	587393-3 587393-7	1-3/4 x 1-3/4 x 1/32 (44) x (44) x (.8)
600-3B	Semtech-3A 400V	587566-3	None Required

*Reverse-polarity rectifiers
**Flat aluminum plate

With POWER switches OFF, connect each unit to an appropriate input power source(115/208/220/230 Vac). All units in the system can be connected through a common ac line OFF/ON switch. Proceed as follows:

1. Set the COARSE and FINE CURRENT controls of each unit fully clockwise.
2. Set the slave unit POWER switch to ON.
3. Set the master unit COARSE and FINE VOLTAGE controls fully counterclockwise, and set its POWER switch to ON.
4. Adjust master unit controls for desired system output level, which, in the case of two identical units, will be twice that indicated on its panel meter.

NOTES

System output for series connected units of different power ratings will be the sum of the individual unit voltages, at a maximum current level equal to that of the lowest unit current rating.

In multiple unit operation, a greater time lag must be anticipated to reach full system output at each power turn on.

3.6 UNIT SHUTDOWN CIRCUIT

In the DCR-B line, shutdown is accomplished by connecting terminal 11 of TB3 to the positive sense (terminal 1 of TB3). This connection may be metallic, (reed relay or wire) or may be a transistor or optical coupler. The device must sink approximately 2 mA from terminal 11, such that pin 11 drops below approximately 10 volts relative to (+) sense. The relay (or transistor) used for shutdown should be rated for 20V. Since the transistor will be connected to the (+) sense output, this device must be isolated (floating) such as through an opto-isolator. An example is in the master/slave connection of two DCR-B power supplies. If the shutdown function is adapted to the master unit, the system output goes to zero; if applied to the slave unit, only that unit is affected and the system output is reduced accordingly.

3.7 OVP

The OVP is a fast response silicon controlled rectifier (SCR) crowbar circuit.

3.7.1 OVP Adjustment

The OVP operating point is set as follows:

1. With OVP potentiometer R3 (accessible through hole in rear panel) fully clockwise, set unit power to ON, and adjust front panel control to the desired trip point as indicated on the unit voltmeter. It is recommended that the OVP trip level be selected at least 10% higher than the desired operating level, to prevent nuisance trip-out.

2. Adjust R3 slowly counterclockwise until the OVP trips. Leave R3 in this position.

3. Set unit power to OFF, and turn front panel voltage control counter-clockwise away from the trip point.

4. Apply unit power and adjust the supply output voltage to the desired operating level.

SECTION 4
THEORY OF OPERATION

4.1 INTRODUCTION

This section provides a basic discussion of unit operating principles, which may be used in conjunction with the troubleshooting chart provided in Section 5 to enable the logical and rapid isolation of unit faults. A brief description of the phase control principle is given first, followed by a block diagram analysis of system functions. The function of each power supply section is then described in detail.

4.2 PHASE CONTROL PRINCIPLE

The sinusoidal wave in Figure 4-1 represents normal ac line voltage. If, by some means, conduction of this voltage is delayed, the average voltage output will be reduced. Control of the delay then results in control of the average voltage. This is phase control. The Silicon Controlled Rectifier (SCR) acts like a switch, activated by the delay circuit, to provide the phase control. The delay is expressed in degrees and is known as the firing angle. Figure 4-1 shows firing angles of 60° and 120°.

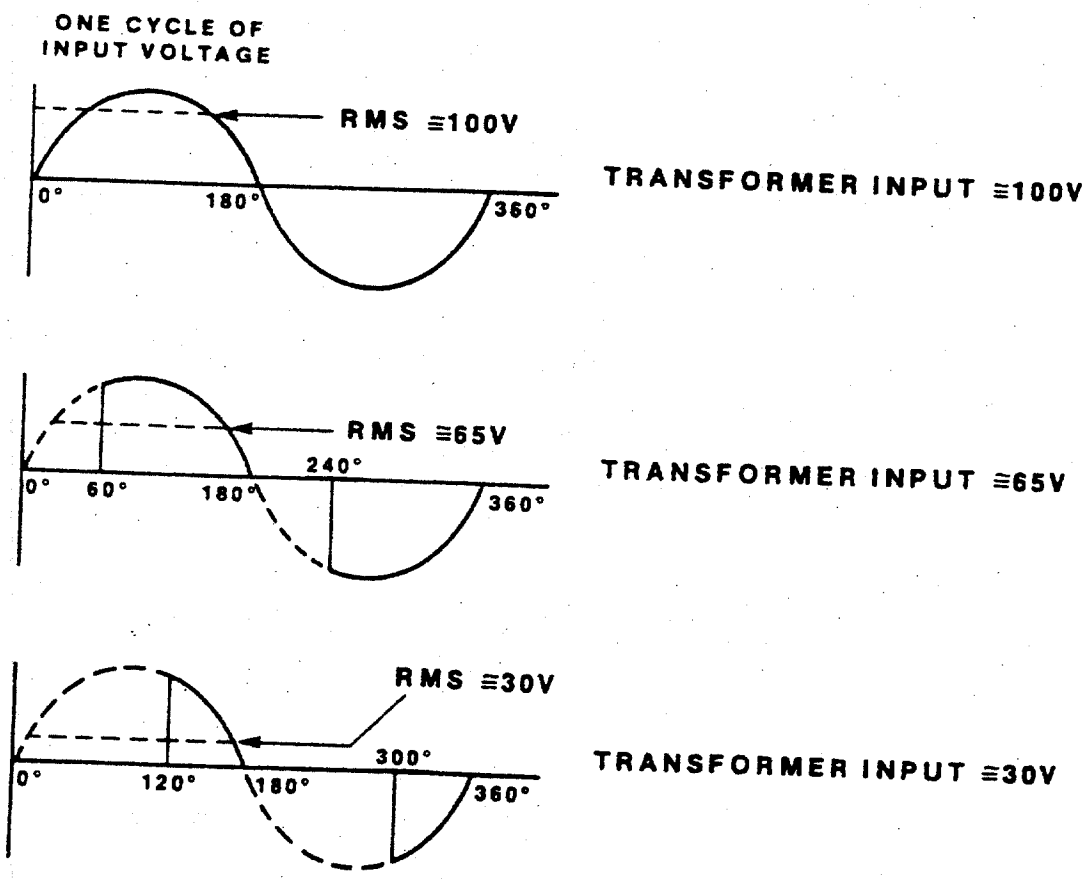

Figure 4-1 Phase Control Firing Angles

4.3 BLOCK DIAGRAM ANALYSIS (Figure 4-2)

The ac input voltage is first applied to CR7 (SCR), which is in series with power transformer T1. CR7 functions with the control circuits to form a feedback loop which prevents a change in output voltage when either the line or load changes.

To accomplish this, the control circuits issue a phase adjusted firing pulse to CR7 once during each half cycle of the input ac voltage. These circuits continuously sample the output voltage, which establishes the precise time at which the firing pulse is to be generated. The phase controlled ac voltage is stepped up or down by power transformer T1, and coupled through a full-wave rectifier and filtering circuits to the output terminals.

Feedback signals from the output back to CR7 originate in the constant voltage/current error amplifiers IC2/IC5. In the constant voltage mode, IC2 continuously compares the supply output with a reference voltage generated by a variable reference programming circuit (IC3). A difference in these voltages appears as an error signal, which is delivered to amplifier IC2. This dc error signal is applied to Q5 (comparator input #1). A sawtooth ramp voltage, generated by Q3, R15, and C6, is applied to Q4 (comparator input #2). The comparator output (across R17) sets the conduction angle of blocking oscillator Q2. The duration of Q2 conduction is directly proportional to the error signal, and its output triggers CR7 into conduction. CR7 acts as a switch, whose firing angle is dependent on the magnitude of dc error signal, thus controlling the overall supply output.

Similarly, in the constant current mode, changes in line or load are sensed by R12, in series with the output. It is then amplified by IC5, and applied to Q5 comparator input. Output control from this point is essentially the same as in the constant voltage analysis, above.

4.4 DETAILED CIRCUIT DESCRIPTION

NOTE

All component/circuit callouts are referenced to PCB schematic diagram Figure 6-1 unless otherwise noted.

4.4.1 Reference and Bias Supplies

The precisely regulated voltage required for operation of the control circuitry is produced by a reference supply consisting of zener diodes CR1/CR4, operational amplifier IC1, passing stage Q1, transformer T2 and center-tapped full wave rectifier CR5/CR6. (See Figures 6-4 through 6-11).

The reference supply output appears across a comparison bridge composed of divider R4/R5, zener CR4, and R6. Error signals are sensed across this bridge and amplified by IC1. The variable impedance characteristic of passing stage Q1 changes the level of absorbed voltage across the stage, maintaining the output at a precisely controlled negative 12.4 volts (Figure 4-3).

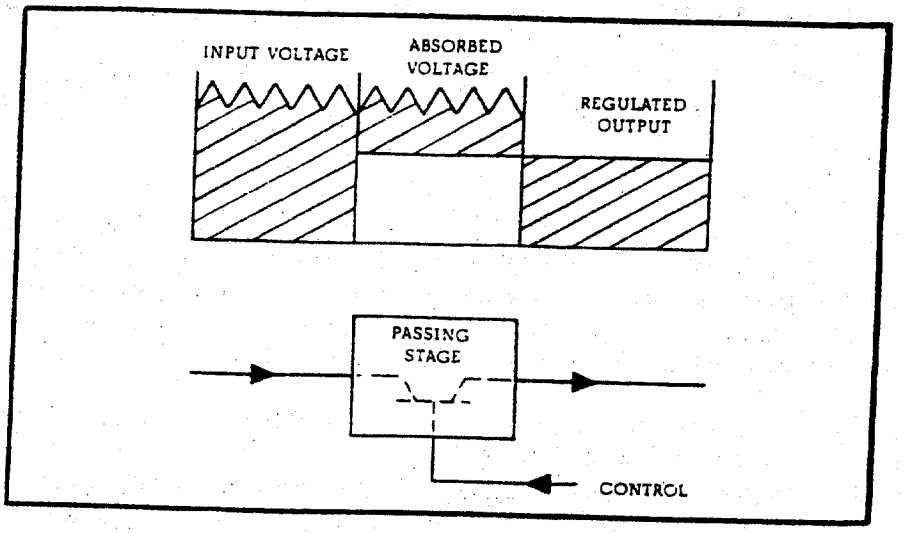

Figure 4-3 Passing Stage Principle

To illustrate circuit operation, assume an increase in the T2 (Figure 6-4 through 6-11) supply output. Pin 2 of IC1 will become more negative, and the output at pin 6 more positive, tending to turn Q1 off. The reduction in drive current increases the impedance of Q1, and consequently its absorbed voltage, resulting in precise regulation of reference supply output.

Several other bias supplies are used to power the control circuitry:

1. +20 volts from CR5. Note that there is no filtering on this 20 volt output. (See waveforms in Figure 6-1). This signal is used as a time reference to the ac line. The +20 volt source is then gated through CR6 and filtered by C2 to provide the +20 Vdc primary operating power for the control PCB.

2. CR23 and R51 utilize the +16 Vdc, derived from R35 and CR17, to generate and precisely regulate the +11.7V for the current amplifier reference voltage.

3. +30 Vdc unregulated (CR3 and CR4 on the overall schematic) is used to operate the current /voltage mode lamps.

4.4.2 Voltage Mode Section

Primary components of this circuit include constant voltage error amplifier IC2, variable reference voltage programmer IC3, and emitter follower stage Q5. The circuit functions as follows:

Pin 3 of IC3 is connected to plus sense. Front panel voltage controls R10/R11 function as variable feedback resistances from IC3 pin 6 to pin 2. The negative 12.4 volt reference through R28/29/30 establishes the desired programming current range, such that from 0 to 10 volts is obtained at pin 6 of IC3.

The main error amplifier is IC2. Pin 4 of IC2 is at virtual dc ground since pin 5 is at ground (+sense). Thus the current through R25 can be varied from 0 to 1 milliampere. This current, through R26, programs the supply to the desired output. IC2 pin 5 senses this output, and compares it to the voltage developed at IC2 pin 4. The resultant is an error signal, amplified by IC2, and coupled to R16 through the emitter of Q5.

An illustration of circuit operation: An increase in system output drives IC2 pin 4 more negative. IC2 pin 11, and thus the Q5 emitter also become more negative, creating the error voltage necessary to retard the firing angle of CR7 through T1/Q2 action as noted in the block diagram analysis. C9/R24 establishes ac loop stability, aided by C8/R23.

4.4.3 Current Mode Section

The primary component in this section is constant current amplifier IC5. The 11.7V reference voltage is divided down by bridge dividers R46/R47 and R48/R49 to IC5 pins 5 and 4 respectively. The resultant voltages are referenced to the positive output, through a current sensing resistor (R12), with R13/R14 serving as the front panel current adjust potentiometers.

R50/C16 establishes ac loop stability. C15/R45 (Variable) is a secondary stability network used for inductive load compensation.

R44/C14 acts to prevent rapid changes in the phase delay angle, caused by large transients. This protects the power components from overstress.

Trimmer R53 is used to adjust zero output current (compensating for current tolerances and offset voltage of IC5).

Trimmer R54 is used to adjust for maximum current setting (compensating for tolerances in panel pot R13 and current shunt R12).

The following is a description of current mode operation. If the output current approaches the current limit setting, the voltage across the sensing resistor becomes larger. This is seen as a positive error voltage at IC5 pin 5, which is amplified and applied to the IC5 output, pin 10. The output of IC5, pin 10 (emitter) is passed through CR13 to the base of the output stage of IC2 at pin 13. The injected current causes the collector of IC2, pin 11 to fall reducing output. (See Voltage Mode section, para. 4.4.2, for additional details).

4.4.4 Ramp Generator, Reset Circuit and Comparator

The ramp generator consists of R15 and C6. The ramp voltage at the junction of R15/C6 is coupled through CR10 to the base of Q4. This voltage starts at a maximum level, and decreases exponentially until reset by Q3 at 8.3 millisecond intervals (each 1/2 cycle of line voltage). The reset pulse for Q3 is generated by CR5/R1 as follows:

The reset circuit consists of Q3 and R13. The full wave rectified ac input from T2 is impressed across CR5/R1. CR5 clamps the base of Q3 at its zener level, keeping it shut off (CR6 is forward biased). As the impressed voltage drops toward zero, the zener voltage follows. CR6 becomes reverse biased. Q3 then turns on from base bias through R13, discharging C6 at the time the line voltage crosses zero volts.

The comparator consists of Q4/Q5, CR10, R16, and R17. Comparator Q4/Q5 compares the dc signal from either the voltage or current mode amplifier (applied to Q5) with the ramp generator voltage. The varying output of Q4 (across R17) establishes the conduction angle of blocking oscillator Q2.

4.4.5 Blocking Oscillator Q2

Q2 functions as a switch, providing the triggering voltage for CR7 and CR8 proportional to the error signal received from the comparator circuit. The blocking oscillator circuit functions as follows: Assume that at a given time the Q4 dc emitter voltage is several volts below the reference level provided by the reference supply circuit (paragraph 4.4.1). At a point when the ramp voltage, appearing at the base of Q4, is more negative than that on its emitter, Q4 conducts. This drives the base of Q2 positive, causing Q2 to conduct. As its collector current (I_c) increases, regenerative action occurs through pulse transformer T1, forcing Q2 into saturation. I_c continues to increase until T1 core saturates. Then T1 voltage decreases, removing Q2 base current. At this point Q2 comes out of saturation. The cycle is then repeated. The output of the pulse generator is a series of narrow pulses, continuing until the end of the line half cycle.

4.4.6 Turn-On and Shut-Down Circuits

Primary components of the turn-on circuit are Q6, Q8, R32, R33, CR16, and C10. Circuit operation is as follows: When power is initially applied to the unit, the bases of Q6/Q8 are driven positive, due to C10 coupling the rising voltage of Vcc. Q6 and Q8 are thus in saturation. The resultant negative voltage at the Q6/Q8 collector maintains voltage error amplifier IC2 and the blocking oscillator/mixer circuits at cut off. This action inhibits the output of the power supply from coming up. As C10 charges, the supply output will increase exponentially. Q6/Q8 gradually come out of saturation until the voltage across C10 reaches the point where they are shut off. The supply is then functioning in its normal manner.

The shut-down circuit, consisting of Q7, R36, R37, and CR18/CR19, cuts off the unit output when the cathode of either diode is connected to the plus sense connection. The circuit function is to actuate Q7, which turns Q6 and Q8 on. When the connection is removed, the power supply returns to normal with the slow start described above.

CR19 (TB3 pin 11) is available for customer use to shut down the dc output. Terminal 11 can be connected to +sense (TB3 Term 1) by either an isolated relay contact or an open collector logic signal (sinking approximately 0.2 mA).

CR18 is used internally to shut down the DCR-B output when the OVP is tripped. Refer to Figures 6-1 and 6-12.

4.4.7 Power Section

The input ac voltage is applied to the primary of power transformer T1 through an SCR, (CR7). The output is rectified by a full wave bridge, and filtered by a Pi network with a damping resistor (R3). The filtered dc is then applied to the output terminals.

4.4.8 Overvoltage Protector (Refer to Figure 6-12)

The OVP consists of a fast response Silicon Controlled Rectifier (SCR) crowbar. A reference voltage (+12V) is generated by zener CR3 and R4. This reference voltage is compared to the output voltage in a bridge circuit, by the ratio of R1 to R2 plus R3 (adjust pot). The bridge output is applied to IC1, pins 3 and 4. Assume that the resistor ratio is set (by adjust pot R3) to produce a balanced bridge at a specified output voltage. If the output voltage exceeds this preset value, IC1, pin 3 will be driven positive relative to pin 4. The result is a positive output at pin 9 to turn on Q1. Q1 applies the +30V unregulated voltage (at P1-1) to the primary of T1. The induced current in the secondary of T1 provides a trigger for the SCR crowbar (CR7) activating the SCR causing a crowbar function across the power supply output terminals. CR6 then conducts which shuts down the pulse generator (via J4-4 on the Control PCB).

The SCR would recover as soon as the output voltage dropped and remove the crowbar current. R5 supplies holding current to CR7 to hold the crowbar on.

To reset the OVP, power must be removed from the power supply input. After a moment to reset, lower the output voltage control, and reapply power to the input.

4.4.9 Indicator Lamps

DS1, which indicates Constant Voltage mode, is wired across J4-3 and J4-1 as shown on the Control PCB schematic, Figure 6-1. DS2, which indicates Constant Current mode, is wired across J4-2 and J4-1.

IC4 is an operational amplifier used to drive DS1 and DS2. The lamps and IC4 are powered from the +30V supply (J3-8) with the return being (+) output (J2-7) on the Control PCB.

The input signal to IC4 determines which lamp lights, as follows:

A. Constant Current Mode (Current Limit) DS2

The input terminals of IC4 are pins 2 and 3. Pin 2 is driven positive relative to pin 3 when the current amplifier (IC5) output (pin 10) is in control (i.e., during current mode operation). Pin 2 positive signal will drive IC4 output (pin 6) low (towards the +30V return). Pin 6 acts to reduce the voltage on DS1 and increases the voltage on DS2. DS2 is turned on brightly and DS1 is turned off.

B. Constant Voltage Mode (DS1)

During Voltage Mode operation, IC4 pin 2 polarity reverses due to loss of IC5 pin 10 voltage, so that IC4 pin 6 output is driven high (towards +30V). This lights DS1 and darkens DS2.

SECTION 5
MAINTENANCE

5.1 GENERAL

This section provides troubleshooting data, periodic servicing, calibration and performance testing procedures. The troubleshooting data should be used in conjunction with the schematic diagrams (Figures 6-1 and 6-4 through 6-11) and Section 4 which outlines the principles of operation. In addition, Figures 6-2 and 6-3 physically locate the components referred to in the text. Any questions pertaining to repair should be directed to the nearest Sorensen representative* or to the factory. Include the model and serial numbers in any correspondence. Should it be necessary to return a unit to the factory for repair, prior authorization from Sorensen Company must be obtained.

5.2 PERIODIC SERVICING

Whenever a unit is removed from service, it should be cleaned, using naptha or an equivalent solvent on painted surfaces, and a weak solution of soap and warm water for the front panel. Compressed air may be used to blow dust from in and around components.

5.3 TROUBLESHOOTING

Table 5-1 provides a list of malfunction symptoms along with a tabulation of the possible cause(s) for each symptom. Note that the failure of a single component may result in a chain reaction effect. As additional aids to troubleshooting, voltage checkpoints have been designated on the printed circuit schematic diagram, Figure 6-1. Figure 6-1 also shows typical waveforms developed across a number of selected components.

5.4 CALIBRATION

Following repair, the unit should be recalibrated to insure that replacement components have not altered performance. Refer to Table 5-3 for unit calibration specifications. The following is the calibration procedure to ensure that full rated voltage output is available:

1. Rotate all the COARSE and FINE CURRENT controls fully clockwise.
2. Set the unit POWER switch to OFF and remove the link between terminals 5 and 6. Connect a precision (±1%) 12K resistor between terminals 4 and 5.
3. Place a precision dc voltmeter across the output sense leads.
4. Set unit POWER switch to ON, and adjust R30 on the printed circuit board (Figure 6-2) until the voltmeter indicates 105% of the full output voltage rating of the supply.
5. Set POWER switch to OFF. Disconnect the voltmeter and 12K resistor, and replace link between terminals 5 and 6.

*See final page for list of Sorensen representatives

5.4.1 Current Mode Section, Limit Settings

1. Set unit POWER switch to OFF. Short output terminals and set CURRENT control to 100% and VOLTAGE control to 50%.

2. Set potentiometer R54 on the PCB to about 20% rotation. Set POWER switch to ON and adjust R54 to the limit stated in specifications Table 5-3, upper limit set point.

3. To preset for zero output current, adjust the CURRENT controls fully counterclockwise. Adjust R53 until the current meter is just above zero and will indicate upscale as soon as the FINE CURRENT control is adjusted clockwise.

4. Turn unit POWER switch to OFF. Remove short. (Test complete).

Table 5-1 DCR-B Troubleshooting

1	No output (voltage mode)	a) Wrong input voltage b) Open fuses and circuit breakers* c) Reference voltages (check levels) d) Defective IC2 or IC3 e) Collector to emitter short on Q3, Q5, Q6, Q7 or Q8 f) Q2 open or shorted
2	Fuse opens or circuit breaker trips	a) CR7 shorted* b) Input capacitors shorted* c) CR8, CR9, CR10, CR11 shorted or open*
3	High output voltage (meter pointer pegs)	a) Sensing or programming leads or link open* b) Defective IC2 or IC3 c) Q4 shorted collector to emitter d) Q5 open collector to emitter e) CR7 shorted*
4	No output (current mode), or unit will not current limit	a) Defective IC5 b) C14 shorted c) CR13 open d) Shorted COARSE CURRENT potentiometer* e) Collector to emitter short on Q3, Q5, Q6, Q7 or Q8 f) Q2 open or shorted
5	Output oscillates (current mode)	a) Potentiometer R45 on unit PCB improperly adjusted

*Chassis components (ref. Figure 6-4)

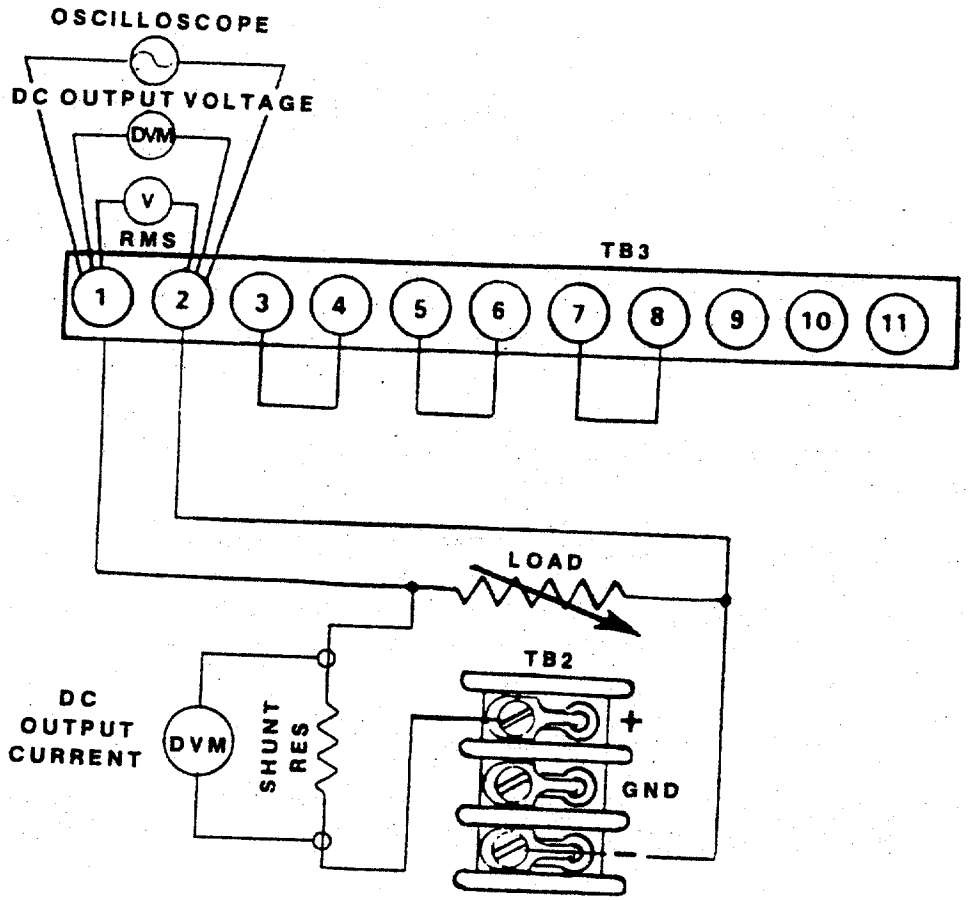

Figure 5-1 Performance Test Setup

5.5 PERFORMANCE TESTING

Sensitive instruments like the DCR-B require rigorous testing methods if a true performance evaluation is to be made. Wherever possible, twisted leads should be used with test equipment to reduce stray pickup. At the power-supply terminal board, these leads must be firmly held by the terminal screws. Alligator clips and similar types of connectors are not suitable. Grounding techniques in which more than one device in the setup is grounded may introduce extraneous ripple that, although unrelated to the power output ripple, is displayed on the test oscilloscope.

5.5.1 Voltage Mode Regulation and Ripple

To check voltage mode regulation and ripple, proceed as follows:

1. Connect a sensitive digital voltmeter and an RMS ac voltmeter across unit output terminals per Figure 5-1. Select a current shunt per Table 52 with a DVM for current output readings.

Use an autotransformer with a current rating that exceeds the maximum unit input current called out in the unit specifications.

NOTE

Input devices such as autotransformers or line regulators can distort the input wave sufficiently to adversely affect performance measurements.

2. Apply high ac line input per specifications and set load switch to OFF. Set the POWER switch to ON.

3. Rotate COARSE CURRENT control fully clockwise.

4. Use COARSE and FINE VOLTAGE controls to obtain rated output voltage Note DVM reading after a few minutes of warm up time.

5. Decrease ac input voltage to low line specification. Output voltage DVM change should not exceed limits specified in Table 5-3.

6. Close load switch and adjust load for rated current. Using high ac line specification and full load, verify ripple meets specification.

5.5.2 Current Mode Regulation

To check current mode regulation, proceed as follows:

1. At no load, adjust output to maximum rated voltage, and set COARSE CURRENT control fully clockwise.

2. Connect a sense resistor (Table 5-2) or a precision meter shunt in series with a variable load across the output terminals.

3. Connect input power at low line per unit specifications. Apply load until rated current of supply is reached. (Unit has voltage mode indicated). Adjust COARSE CURRENT control until CURRENT mode indicator is lit and output volts DVM drops at least 5% of full scale value.

4. Connect a digital voltmeter across the sensing resistor, and note the indication.

5. Increase input voltage until input voltage is at high line, and reduce the load resistance to zero (short). Note indication on the digital voltmeter. Change in voltmeter reading (expressed in millivolts) should be divided by sense resistor value to obtain regulation in milliamperes. Limits are provided in Table 5-3.

5.5.3 Transient Response

Test for transient response as follows:

1. Connect an oscilloscope across the unit output terminals.

2. Set unit POWER switch to ON. Adjust COARSE VOLTAGE control for rated output, and COARSE CURRENT control fully clockwise.

3. Apply half load, and then abruptly apply full load (or switch from full load to half load). Return to steady state operation should occur within 50 milliseconds (typical). See Table 5-3 for typical transient deviation voltage values.

NOTE

Load switching time should be less than 3 milliseconds.

Table 5-2
Sensing Resistor Values (Current Mode Regulation Check)

DCR MODEL	SENSE RESISTOR (Ohms)
10-120B	0.001, 50W
20-80B	0.01, 50W
40-40B	0.01, 50W
60-30B	0.01, 50W
80-20B	0.01, 50W
150-12B	0.1, 25W
300-6B	0.1, 25W
600-3B	0.1, 25W

Table 5-3
Unit Calibration Specifications

DCR Model	Regulation Voltage Mode (mV)	Regulation Current Mode (mA)	Ripple Volt Mode (mV)	Transient Deviation (Volts)	Maximum Compliance (Vdc)	Cur. Mode Upper Limit Set Pt. (A)
10-120B	3	300	65	0.6	10	138
20-80B	6	200	65	1.2	20	92
40-40B	12	100	90	2.4	40	46
60-30B	18	75	125	3.6	60	34.5
80-20B	24	50	150	4.8	80	23
150-12B	45	30	300	9.0	150	13.8
300-6B	90	15	700	18	300	6.9
600-3B	180	7.5	1200	36	600	3.45

5.6 HI-POT TEST PROCEDURE

High potential test procedures have been carefully carried out at the factory. These units are 100% tested and should not require further testing in the field.

CAUTION

High potential tests can overstress or destroy the power semiconductors in this power supply if improperly applied.

Isolation measurements may be made using a standard VOM (Simpson 260 or equivalent) on the highest resistance scale available.

If it is essential to use the high potential test method, please contact the factory for information on special precautions that should be taken.

CAUTION

Sorensen Company cannot be held liable for any malfunctions resulting from the application of a high potential test (greater than 100V). See standard Sorensen Company warranty.

SECTION 6
DRAWINGS AND PARTS LISTS

6.1 GENERAL

This section provides a coded replaceable parts list keyed to both the schematic diagrams and assembly drawings (Figures 6-1 through 6-12). Tables 6-1 through 6-3 summarize the part numbers of all identified components. Figure 6-1 is the printed circuit board (PCB) schematic diagram. Figures 6-2 and 6-3 physically locate parts on the PCB and chassis frame respectively.

Figures 6-4 through 6-11 are final assembly schematic diagrams for each of the units in the series. Included in these schematics are alternate connections for T1 and T2 primaries for 208, 220, and 230 Vac inputs.

CAUTION

Do not change input voltage unless parts per Table 6-2 (page 6-17) are also changed.

Figure 6-12 is the Over Voltage Protector schematic and parts location drawing.

6.2 PARTS LIST COLUMN HEADINGS DEFINED

Tables 6-1, 6-2 and 6-3 identify parts for all units in the series, tabulated as follows:

Circuit Symbol: Component identification on the respective schematic diagram.

DCR-B Model: Separate column for each model in the series.

Description: Basic item, its value and electrical characteristics.

Sorensen P/N: The number to be used when ordering parts. Call Sorensen at 1-800-733-5427, or order directly from:

SORENSEN
Sales & Technical Support
9250 Brown Deer Road
San Diego, CA 92121-2294
1-800-73ELGAR (1-800-733-5427)
Tel: (858) 450-0085
Fax: (858) 458-0267
E-mail: sales@sorensen.com
www.sorensen.com

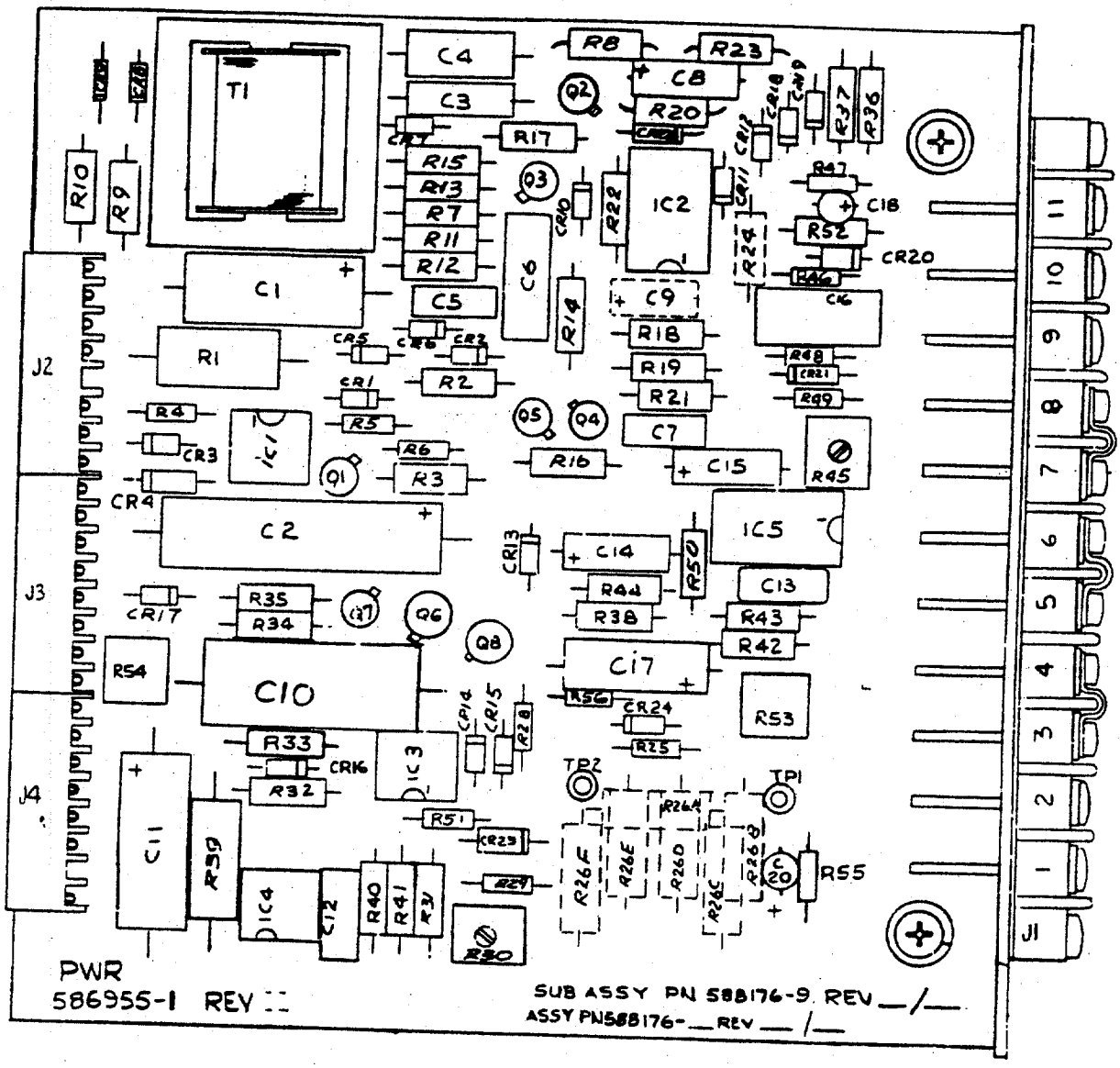

Figure 6-2 PCB Component Location Diagram

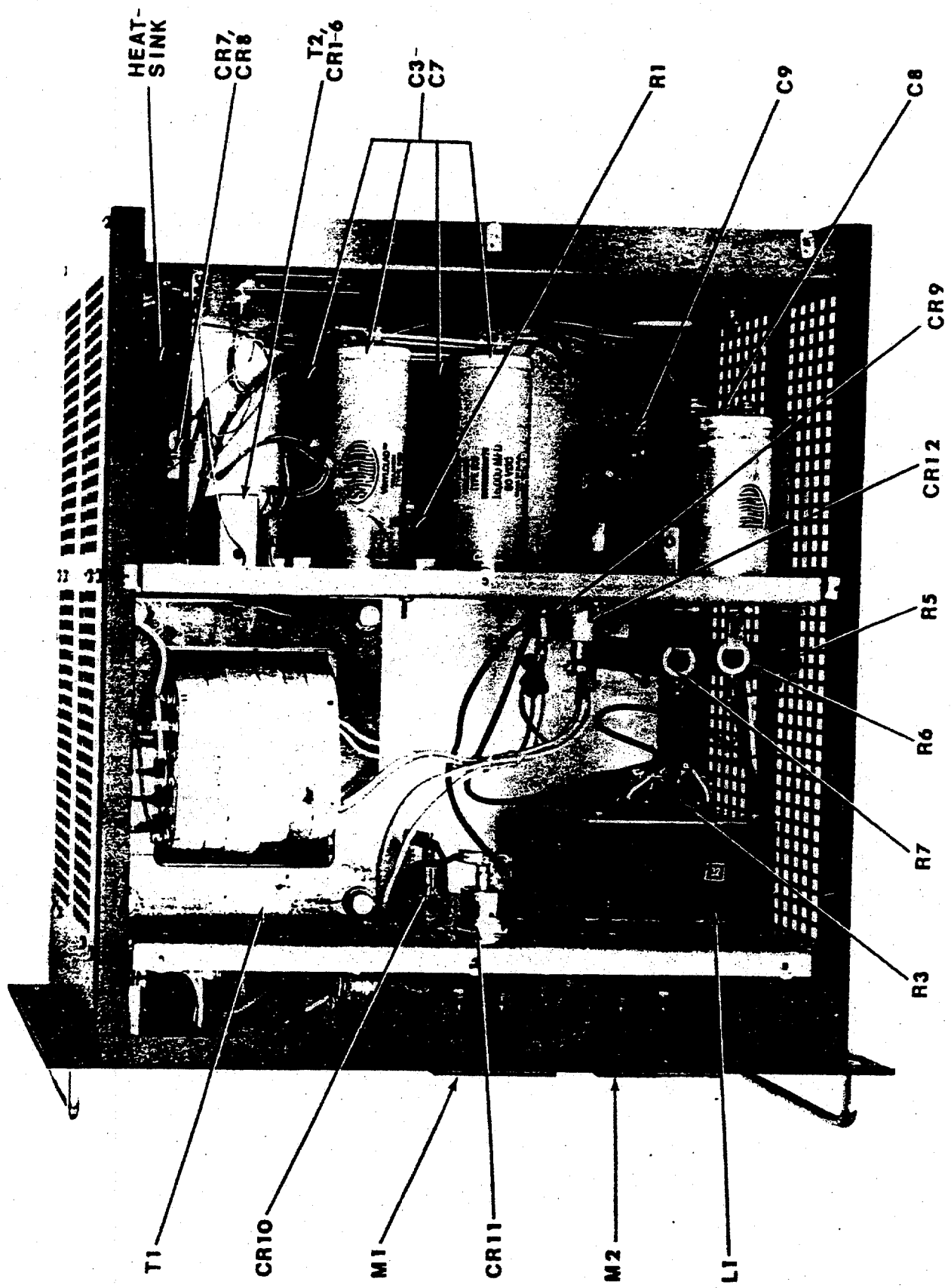

Figure 6-3 Component Layout, Typical Assembly

Table 6-2
Replaceable Parts List
DCR-B Main Assembly, 1800 Watt Series

Circuit Symbol	DCR-B Model 10-120	20-80	40-40	60-30	80-20	150-12	300-6	600-3	Description	Sorensen Part No.
									Capacitors (uF Unless Noted)	
C1	x	x	x	x	x	x	x	x	0.1, 600V	24-2110-13
C2	x	x	x	x	x	x	x	x	0.01, 600V	24-2110-7
C3-5	x								47,000, 15V	587193-4
		x							29,000, 25V	587193-5
			x						16,000, 50V	24-2595-6
				x					6,500, 75V	24-2593-1
					x				4,200, 100V	24-2446-4
						x			1,100, 200V	588085-5
							x	x	510, 400V	588084-5
C6	X								47,000, 15V	587193-4
		x							29,000, 25V	587193-7
			x						16,000, 50V	24-2695-6
				x					6,500, 75V	24-2593-1
					x				4,200, 100V	24-2446-4
						x			1,100, 200V	588085-5
							x	x	510, 400V	588084-5
C7	x								47,000, 15V	587193-4
		x	x		x		x	x	Not Used	
				x					6,500, 75V	24-2593-1
						x			1,100, 200V	588085-5
C8	x								160,000, 15V	24-2594-3
		x							98,000, 25V	24-2544-10
			x						29,000, 25V	24-2595-5
				x					12,000, 75V	24-2593-4
					x				7,000, 100V	24-2446-5
						x			1,800, 200V	588085-7
							x		830, 400V	588084-7
								x	510, 400V	588084-5
C9	x								160,000, 15V	24-2594-3
		x							98,000, 25V	24-2544-10
			x						29,000, 50V	24-2595-5
				x					12,000, 75V	24-2593-4
					x				7.000, 100V	24-2446-5
						x			1,800, 200V	588085-7
							x		Not Used	
								x	510, 400V	588084-5
C10	x	x	x	x	x	x	x	x	0.1, 600V	24-2110-13
C11	x	x	x	x	x	x	x	x	0.1, 600V	24-2110-13
C12	x	x	x	x	x	x	x	x	0.1, 200V	24-2409-13
C13	x	x	x	x	x	x	x	x	0.1, 200V	24-2409-13
C14	x								47,000, 15V	587193-4
C15	x								47,000, 15V	587193-4
C16					x	x	x		0.1, 600V	24-2110-13
C17					x	x	x		0.1, 600V	24-2110-13

Table 6-2 (Cont'd)
Replaceable Parts List
DCR-B Main Assembly, 1800 Watt Series

Circuit Symbol	DCR-B Model 10-120	20-80	40-40	60-30	80-20	150-12	300-6	600-3	Description	Sorensen Part No.
CB1*	x	x	x	x	x	x	x	x	Circuit Breaker, 125V, 50A	588764-1
									Diodes	
CR1	x	x	x	x	x	x	x	x	S16	587565-4
CR2	x	x	x	x	x	x	x	x	S16	587565-4
CR3	x	x	x	x	x	x	x	x	S12	587565-2
CR4	x	x	x	x	x	x	x	x	S12	587565-2
CR5	x	x	x	x	x	x	x	x	S12	587565-2
CR6	x	x	x	x	x	x	x	x	S12	587565-2
CR7*	x	x	x	x	x	x	x	x	C137, 35A	26-1159-1
CR8*	x	x	x	x	x	x	x	x	C137, 35A	26-1159-1
CR9	x								1N4044	588513-1
		x	x						1N4587	587571-5
				x	x				1N1186A	587382-3
						x			1N1188A	587382-4
							x		1N1206A	587393-4
								x	3S18	587566-5
CR10	x								1N4044	588513-1
		x							1N4578R	587571-7
			x						1N4587	587571-5
				x	x				1N1186A	587382-3
						x			1N1188A	587382-4
							x		1N1206A	587393-4
								x	3S18	587566-5
CR11	x								Not Used	
		x							1N4587R	587571-7
			x						1N4587	587571-5
				x	x				1N1186A	587382-3
						x			1N1188A	587382-4
							x		1N1206A	587393-4
								x	3S18	587566-5
CR12	x								Not Used	
		x	x						1N4587	587571-5
				x	x				1N1186A	587382-3
						x			1N1188A	587382-4
							x		1N1206A	587393-4
								x	3S18	587566-5
CR13-CR16	x	x	x	x	x	x	x		Not Used	
								x	3S18	587566-5
									Lamps	
DS1	x	x	x	x	x	x	x	x	2110QA4	43-357
DS2	x	x	x	x	x	x	x	x	Voltage, LED, 6500-2-2K	1058485-1
DS3	x	x	x	x	x	x	x	x	Current, LED, 6500-2-2K	1058485-1

Table 6-2 (Cont'd)
Replaceable Parts List
DCR-B Main Assembly, 1800 Watt Series

Circuit Symbol	DCR-B Model 10-120	20-80	40-40	60-30	80-20	150-12	300-6	600-3	Description	Sorensen Part No.
F1*	x	x	x	x	x	x	x	x	Fuse, MDL15, 0.2A	42-1203
XF1	x	x	x	x	x	x	x	x	Fuseholder	42-459
L1	x								Filter Choke	589277-1
		x								589277-2
			x							589277-3
				x						589277-4
					x					589277-5
						x				589277-6
							x			589277-7
								x		589277-8
									Panel Meters	
M1	x								Voltmeter, 0-12V	94-579-1
		x							Voltmeter, 0-25V	94-579-2
			x						Voltmeter, 0-50V	94-579-3
				x					Voltmeter, 0-80V	94-579-4
					x				Voltmeter, 0-100V	94-579-5
						x			Voltmeter, 0-200V	94-579-6
							x		Voltmeter, 0-400V	94-579-7
								x	Voltmeter, 0-800V	94-579-8
M2	x								Ammeter, 0-150A	94-462-14
		x							Ammeter, 0-100A	94-462-13
			x						Ammeter, 0-50A	94-462-10
				x					Ammeter, 0-40A	94-462-7
					x				Ammeter, 0-30A	94-462-6
						x			Ammeter, 0-15A	94-462-4
							x		Ammeter, 0-8A	94-462-2
								x	Ammeter, 0-5A	94-462-1
									Resistors (Ohms, 1/2W, 10% Unless Noted)	
R1	x	x	x	x	x	x	x	x	1.5K, 10W	27-541
R2	x	x	x	x	x	x	x	x	150, 2W	280-1147P44
R3	x								0.22, 12.5W	27-590-9
		x							0.56, 12.5W	27-590-19
			x						0.39, 12.5W	27-590-15
				x					0.82, 12.5W	27-590-23
					x				2.2, 12.5W, 5%	27-590-33
						x			4.7, 12.5W, 5%	27-590-41
							x		12, 12.5W, 5%	27-590-51
								x	68, 12.5W, 5%	27-590-69
R4	x								0.22, 12.5W	27-590-9
		x							0.56, 12.5W	27-590-19
			x	x		x	x	x	Not Used	
					x				2.2, 12.5W, 5%	27-590-33

Table 6-2 (Cont'd)
Replaceable Parts List
DCR-B Main Assembly, 1800 Watt Series

Circuit Symbol	DCR-B Model 10-120	20-80	40-40	60-30	80-20	150-12	300-6	600-3	Description	Sorensen Part No.
									Resistors (Ohms, 1/2W, 10%, Unless Noted) (Cont'd)	
R5-R7	x								5, 50W, 5%	27-807
		x							20, 50W, 5%	27-1041
			x						75, 50W, 5%	27-842
				x					150, 50W, 5%	27-875
					x				250, 50W, 5%	27-813
						x			1K, 50W, 5%	27-863
							x	x	4K, 50W, 5%	27-1018
R8	x	x	x	x	x	x	x		Not Used	
								x	4K, 50W, 5%	27-1018
R9	x								50 mV, 150A Shunt	588151-5
		x							50 mV, 100A Shunt	588151-2
			x						50 mV, 50A Shunt	588151-1
				x					50 mV, 40A Shunt	588151-4
R10	x	x	x	x	x	x	x	x	12K, 2W, Variable	29-590
R11	x	x	x	x	x	x	x	x	80, 2W, Variable	29-593
R12	x								0.0033	589253-1
		x							0.005	589254-1
			x						0.01	589255-1
				x					0.013	589256-1
					x				0.02	589257-1
						x			0.033	589258-1
							x		0.067	589259-1
								x	0.133	589260-1
R13	x	x	x	x	x	x	x	x	650, 2W, Variable	589336-1
R14	x	x	x	x	x	x	x	x	80, 2W, Variable	29-593
R15	x	x	x	x	x				Not Used	
						x			0.2, 40W	27-2002
							x		0.82, 12.5W	27-590-23
								x	3.3, 12.5W, 5%	27-590-37
R16	x	x	x	x	x	x			Not Used	
							x		0.82, 12.5W	27-590-23
								x	3.3, 12.5W, 5%	27-590-37
R17	x	x	x	x	x	x	x		Not Used	
								x	68, 12.5W, 5%	27-590-69
									Transformers	
T1	x								Input	589278-1
		x								589278-2
			x							589278-3
				x						589267-4
					x					589278-5
						x				589278-6

Table 6-2 (Cont'd)
Replaceable Parts List
DCR-B Main Assembly, 1800 Watt Series

Circuit Symbol	DCR-B Model 10-120	20-80	40-40	60-30	80-20	150-12	300-6	600-3	Description	Sorensen Part No.
T1 (Cont'd)							x	x		589278-7
T2	x	x	x	x	x	x	x	x	Control	588240-1
									Miscellaneous	
TB1	x	x	x	x	x	x	x	x	AC Input Terminal Block	587924-103
TB2	x	x							Output	588499-1
			x							4-028
				x	x	x	x	x		247-7204P103
J2/J3/J4	x	x	x	x	x	x	x	x	Cable Conn., Molex 09-50	586287-5
J5	x	x	x	x	x	x	x	x	OVP Conn., Molex 09-57-1035	587008-2
P2/P3/P4	x	x	x	x	x	x	x	x	PCB I'face Molex 09-57-1081	589801-1
	x								Front Panel	589188-9
		x								589188-10
			x							589188-11
				x						589188-12
					x					589188-13
						x				589188-14
							x			589188-15
								x		589188-16
									* For 208/220/230 Vac Inputs (M1/M2/M3 Options Respectively)	
CB1	x	x	x	x	x	x	x	x	62MC7B122, 250V, 25A	588763-4
CR7	x	x	x	x	x	x	x	x	C137E, 35A	26-1159-3
CR8	x	x	x	x	x	x	x	x	C137E, 35A	26-1159-3
F1	x	x	x	x	x	x	x	x	Fuse, 0.1A, 250V	226-7177P32

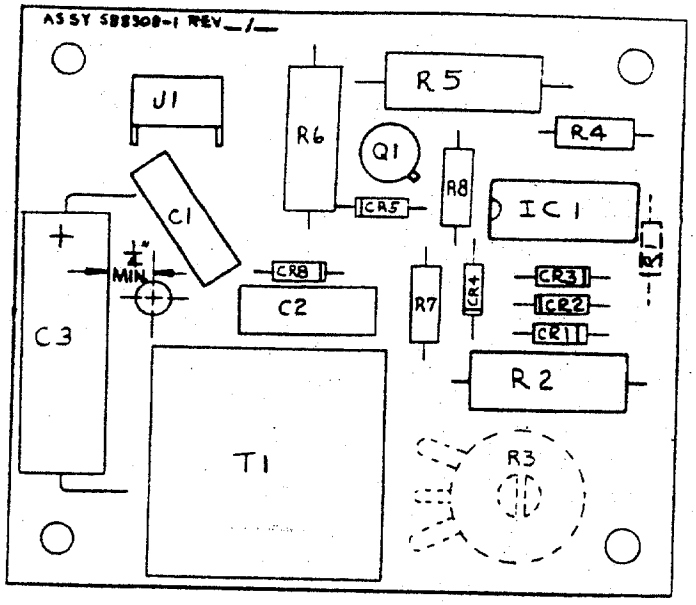

C 589308-1 Rev G

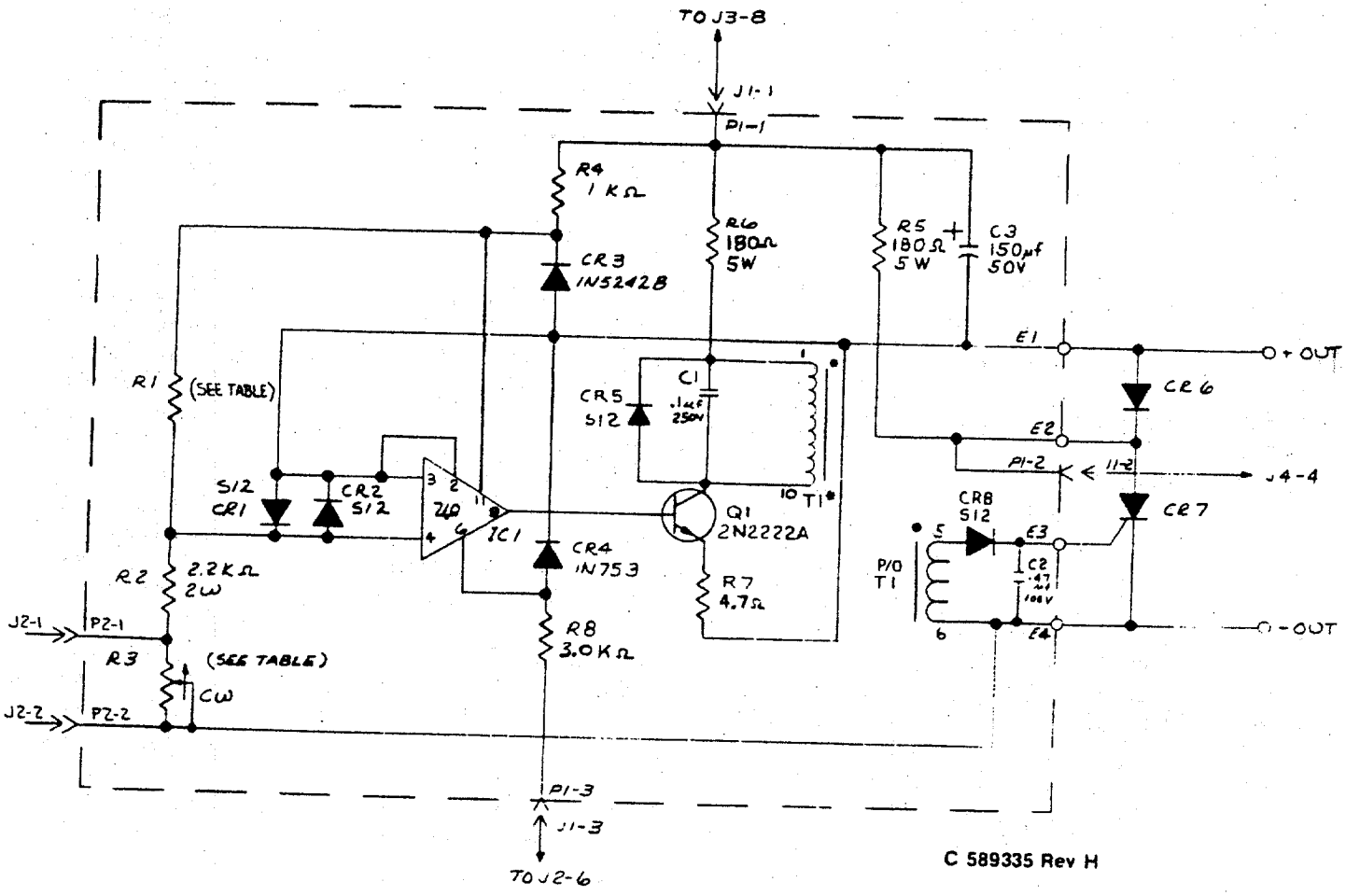

C 589335 Rev H

Figure 6-12 OVP PCB Schematic and Component Location

Table 6-3
Replaceable Parts List
DCR-B OVP

Circuit Symbol	DCR-B Model 10V	20V	40V	60V	80V	150V	300V	600V	Description	Sorensen Part No.
									Capacitors (uF Unless Noted)	
C1	x	x	x	x	x	x	x	x	0.1, 250V	24-2015-13
C2	x	x	x	x	x	x	x	x	0.47, 100V	24-2037-15
C3	x	x	x	x	x	x	x	x	150, 50V	586048-1
C4	x	x	x	x	x	x	x	x	47, 100V	24-2037-15
CR1	x	x	x	x	x	x	x	x	S12	587565-2
CR2	x	x	x	x	x	x	x	x	S12	587565-2
CR3	x	x	x	x	x	x	x	x	1N5242B	588101-5
CR4	x	x	x	x	x	x	x	x	1N753	588101-9
CR5	x	x	x	x	x	x	x	x	S12	587565-2
CR6	x	x	x	x	x	x	x	x	1N4587	587571-5
CR7	x	x	x	x	x				68-6083	1057662-1
						x	x		68-6082	1057662-2
								x	68-6085	1057662-3
CR8	x	x	x	x	x	x	x	x	S12	587565-2
IC1	x	x	x	x	x	x	x	x	SN72710CN	386-7277P4
Q1	x	x	x	x	x	x	x	x	2N2222A	386-7249P57
									Resistors (Ohms)	
R1	x								9.1K, 1/4W, 2%	585108-57
		x	x		x				11.5K, 1/8W, 1%	586055-125
				x			x	x	6.8K, 1/4W, 2%	585108-51
						x			5.6K, 1/4W, 2%	585108-47
R2	x	x	x	x	x	x	x	x	2.2K, 2W, 10%	280-1147P86
R3	x								10K, 2W, Variable	589337-16
		x							25K, 2W, Variable	589337-19
			x	x					50K, 2W, Variable	589337-21
					x	x			100K, 2W, Variable	589337-23
							x		250K, 2W, Variable	589337-26
								x	500K, 2W, Variable	589337-28
R4	x	x	x	x	x	x	x	x	1K, 1/2W, 5%	280-1147P73
R5	x	x	x	x	x	x	x	x	180, 5W, 5%	586054-40
R6	x	x	x	x	x	x	x	x	10K, 1W, 10%	280-1146P109
R7	x	x	x	x	x	x	x	x	22, 1/2W, 10%	280-1145P14
R8	x	x	x	x	x	x	x	x	3K, 1/2W, 5%	280-1145P90
T1	x	x	x	x	x	x	x	x	Transformer, Pulse	589333-1
J1	x	x	x	x	x	x	x	x	PCB Connector	588893-1
	x	x	x	x	x	x	x	x	OVP PCB Assembly	589308-1

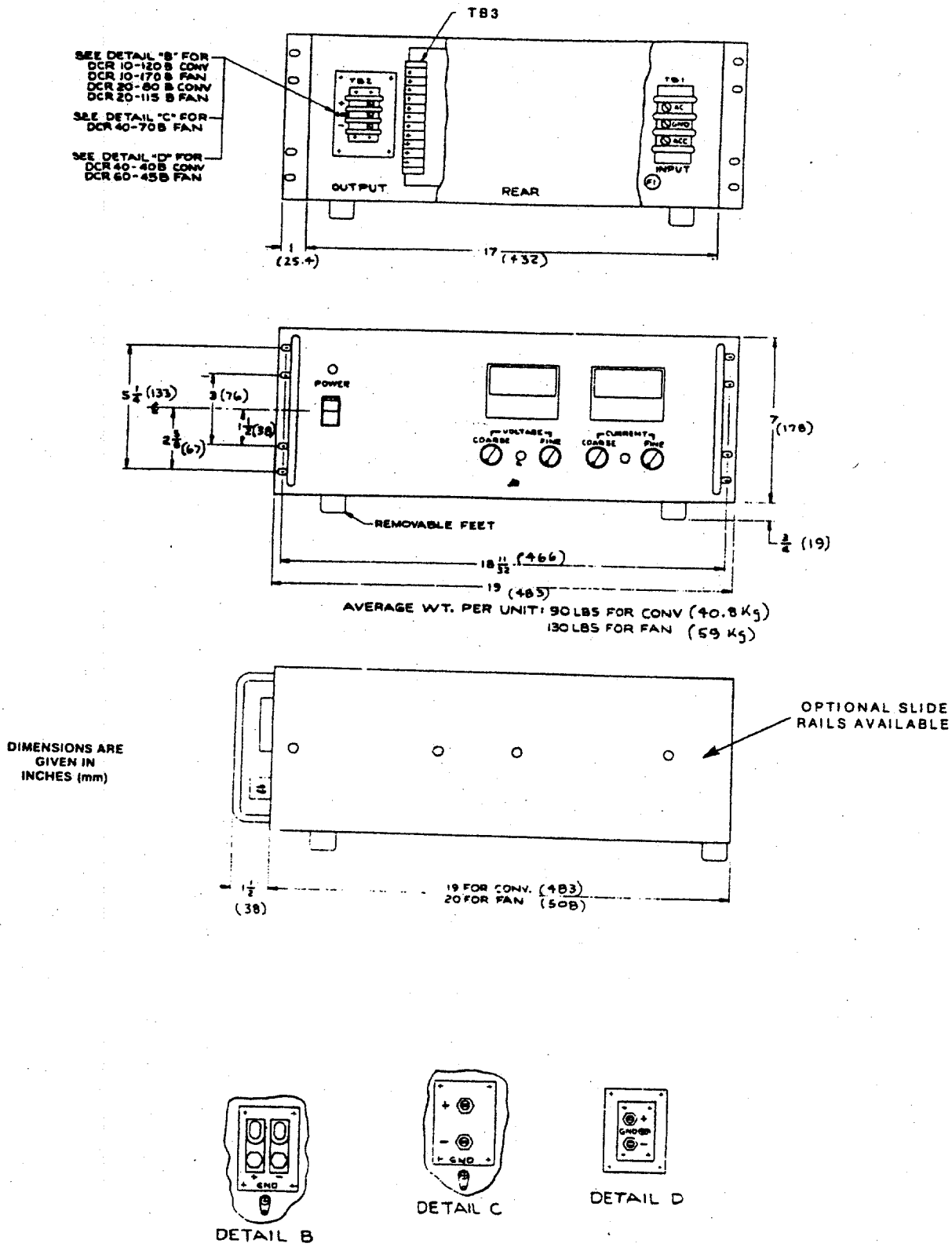

Figure 6-13 DCR-B Outline Drawing

SERVICE NOTES