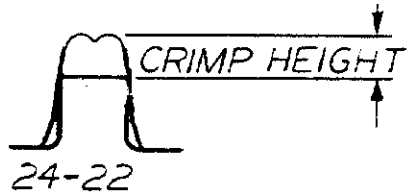

WIRE CRIMP				TERMINAL CRIMP HEIGHT
CRIMP SYMBOL	DIM	GO	NO GO	
24-22	F	.0293	.0343	.0365 /
	D	.0412	.0445	/ .0310

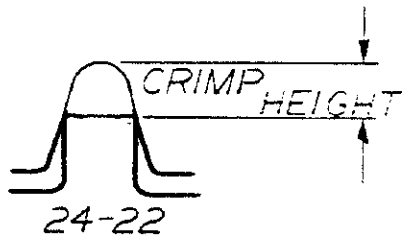

INSULATION CRIMP				TERMINAL CRIMP HEIGHT
CRIMP SYMBOL	DIM	GO	NO GO	
24-22	O	.0590	.0690	# / #

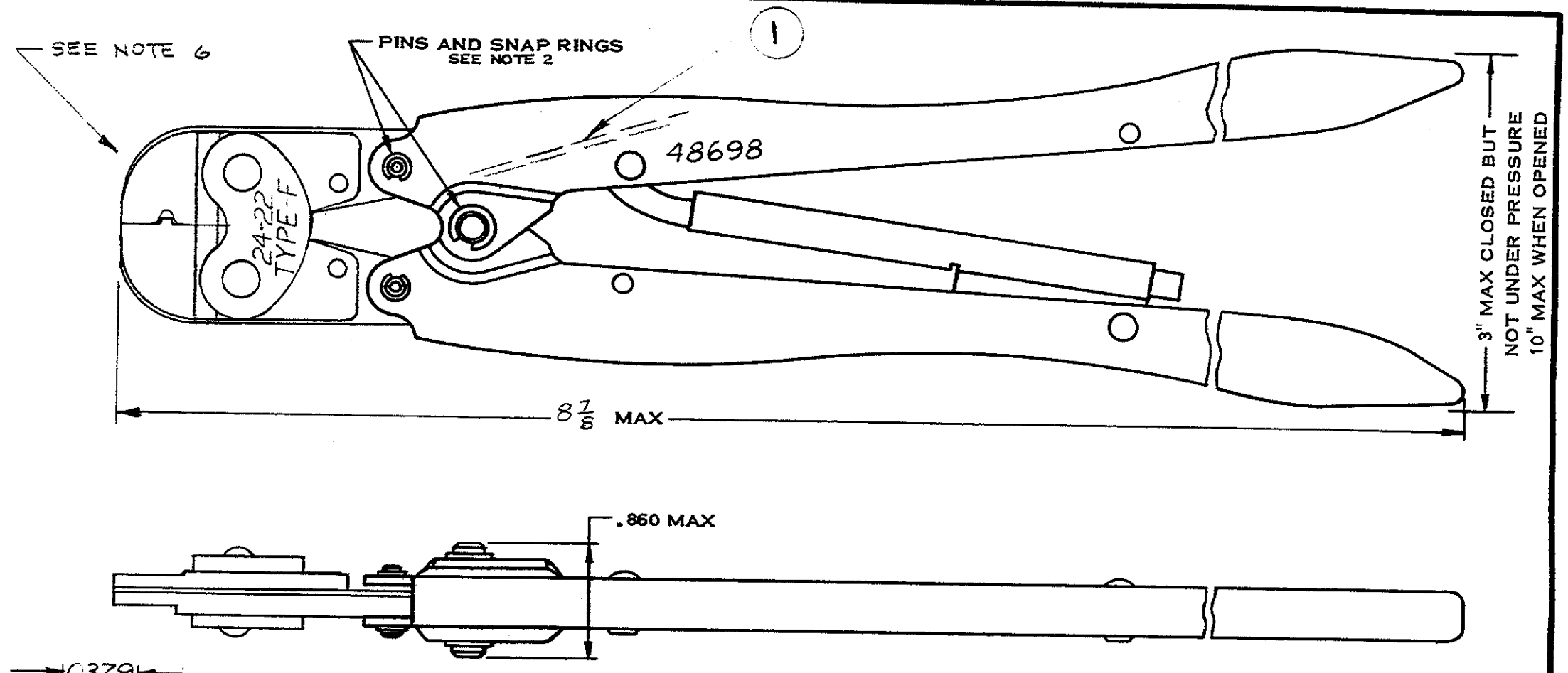

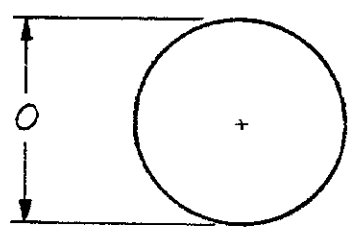

INSULATION CRIMP
CRIMP SYMBOL 24-22

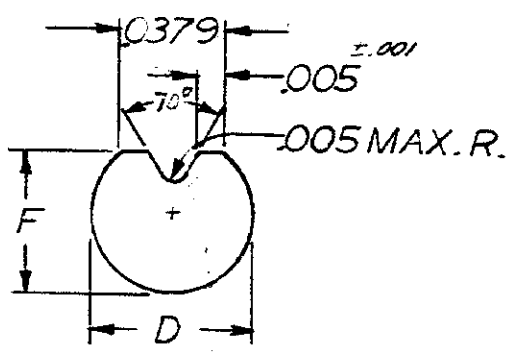

WIRE CRIMP
CRIMP SYMBOL 24-22

ENLARGED END VIEW OF GAGES

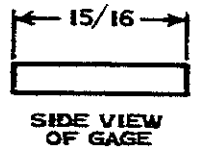

SIDE VIEW OF GAGE

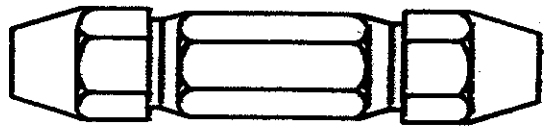

SUGGESTED DOUBLE END HANDLE A.G.D. STD.

1. CRIMP GAGE DIMENSIONS APPLY WHEN TOOL IS CLOSED OR BOTTOMED BUT NOT UNDER PRESSURE.
2. FOR REPLACEMENT OF PARTS SUCH AS PINS AND SNAP RINGS. ORDER REPAIR KIT NO. 125218-4.
3. FOR REPLACEMENT OF PARTS OTHER THAN PINS AND SNAP RINGS. TOOL IS TO BE RETURNED TO AMP INC., HARRISBURG, PENNA. TO INSURE PROPER CERTI-CRIMP ADJUSTMENT.
4. FOR TOOL USAGE. SEE INSTRUCTION SHEET NO. 1580.
5. HAND TOOL CAN BE CHECKED BY MEASURING TERMINAL CRIMP HEIGHT.
6. GRIND MARK MAY APPEAR ON WIRE ANVIL CORNER OF SOME TOOLS. SUCH TOOLS ARE NOT DEFECTIVE.

DIMENSIONS IN INCHES DO NOT SCALE PRINT

PRINT DIST 36 F2

SUGGESTED GAGE DESIGN

LTR	REVISION RECORD	DR	CHK	DATE
F2	LOC M WAS R	[illegible]	[illegible]	6/11/62
F-1	ADDED NOTE 6	[illegible]	[illegible]	11/24/62
F	ADDED TERM WIRE CH.	RB	[illegible]	8/9/62
E	REDRAWN & REVISED	RB	[illegible]	12/28/62

NUMBER 48698

NO. REQD	NUMBER	NAME	ITEM NO.
1	39364	HANDLE SPRING	1

©1954 BY AMP INCORPORATED. ALL RIGHTS RESERVED.
AMP PRODUCTS COVERED BY PATENTS AND/OR PATENTS PENDING.

CUSTOMER COPY REFERENCE ONLY

DR R.J. FINLEY 12-1-54
CHK L.R. BROWN 12-1-54
DE
APP R. WITMYER 12-2-54

MATERIAL-STEEL
FINISH-BLACK OXIDE
WEIGHT-0 LBS. 15 OZ.

AMP INCORPORATED HARRISBURG, PENNA.

CLASS #
WIRE-RANGE-INSULATION # | #
TYPE #
TOLERANCE EXCEPT AS NOTED #
SCALE #
LOC M B
NO 48698
REV F-2

NAME DOUBLE ACTION HAND TOOL

CUSTOMER DRAWING

AMP 1253-4