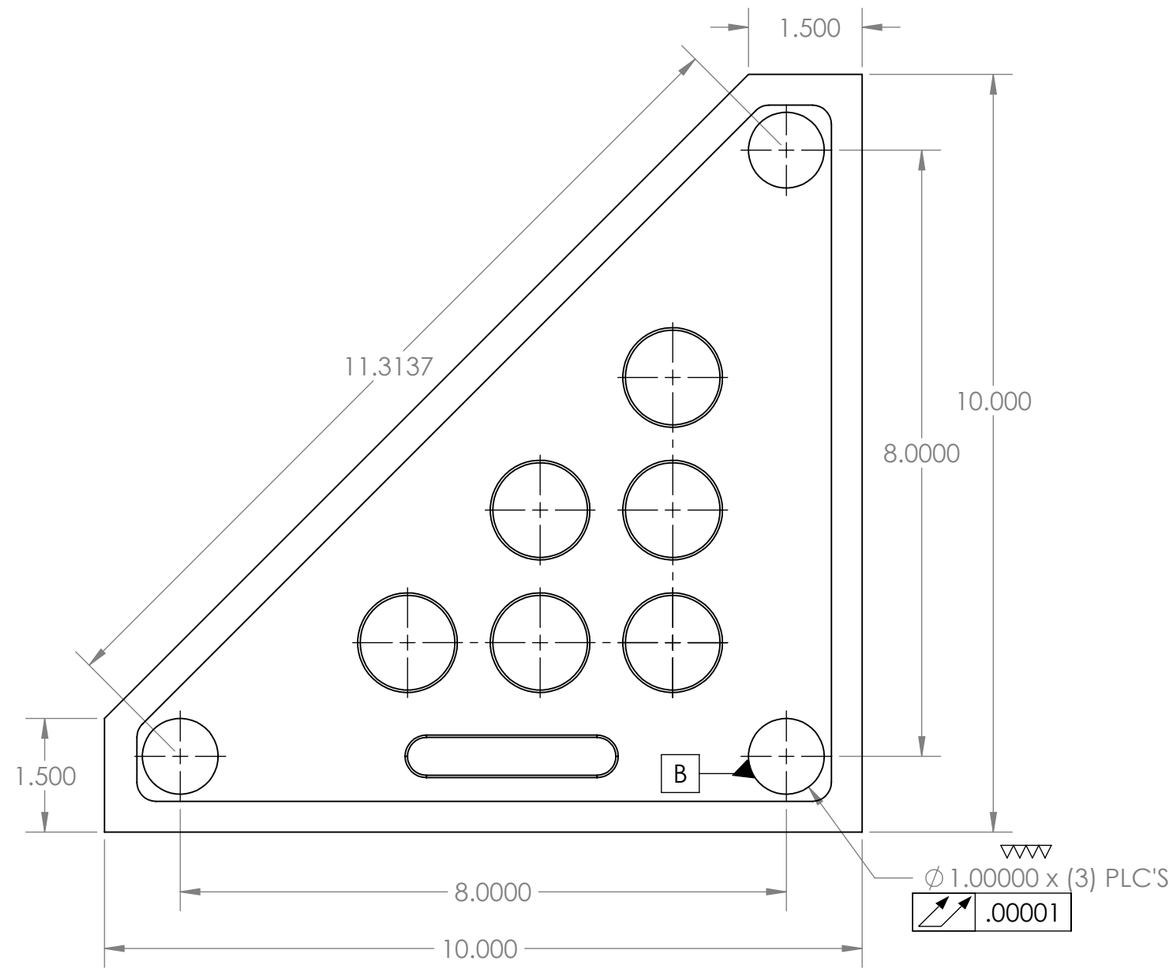

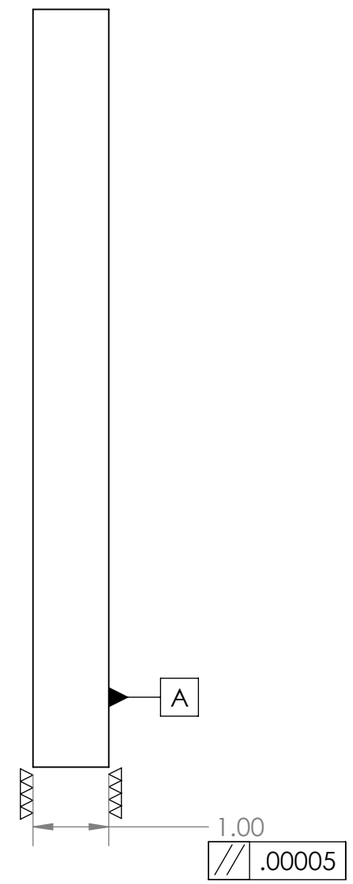

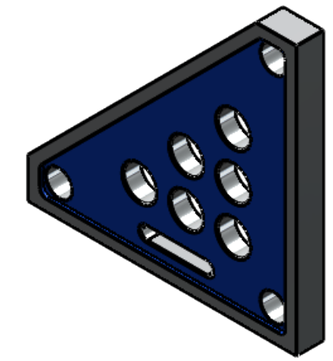

CALIBRATED ACCURACIES

DIAMETER ROUNDNESS: .00001"

LENGTH MEASURMENT OF UNCERTAINTY: .00002"

90° DEGREE ANGLE: ± 1 SECOND

FLATNESS AND PALLELISM: .00005"

PROPRIETARY AND CONFIDENTIAL

THE INFORMATION CONTAINED IN THIS DRAWING IS THE SOLE PROPERTY OF GLASTONBURY SOUTHERN GAGE. ANY REPRODUCTION IN PART OR AS A WHOLE WITHOUT THE WRITTEN PERMISSION OF GLASTONBURY SOUTHERN GAGE IS PROHIBITED.

NEXT ASSY	USED ON
APPLICATION	

UNLESS OTHERWISE SPECIFIED:

DIMENSIONS ARE IN INCHES
TOLERANCES:
FRACTIONAL± 1/16
ANGULAR: MACH± 30'
BEND ± 1.0 DEG
TWO PLACE DECIMAL ±.010
THREE PLACE DECIMAL ±.005
FOUR PLACE DECIMAL ±.0005

INTERPRET GEOMETRIC TOLERANCING PER:

MATERIAL
440 SS Rc50-55

FINISH
GRIND/LAP/PAINT

DO NOT SCALE DRAWING

	NAME	DATE
DRAWN	PRG	2/25/16
CHECKED		
ENG APPR.		
MFG APPR.		
Q.A.		

COMMENTS:

TITLE:
8.0 QUIKCHEK

SIZE	DWG. NO.	REV
B	GSG8.0QC	

SCALE: 1:2 | WEIGHT: | SHEET 1 OF 1