REVISIONS				
REV. SYM.	E.C.O. NUMBER	DESCRIPTION	BY DATE	APP'D DATE
1		ORIGINAL RELEASE	DVC 8/12/94	DE 8/94
2		REVISED GAGE DIM.	JWJ 6/3/98	RRR 6/3/98
3		REVISED MARKINGS ON STATIONARY DIE	JWJ 12/20/98	RRR 12/20/98

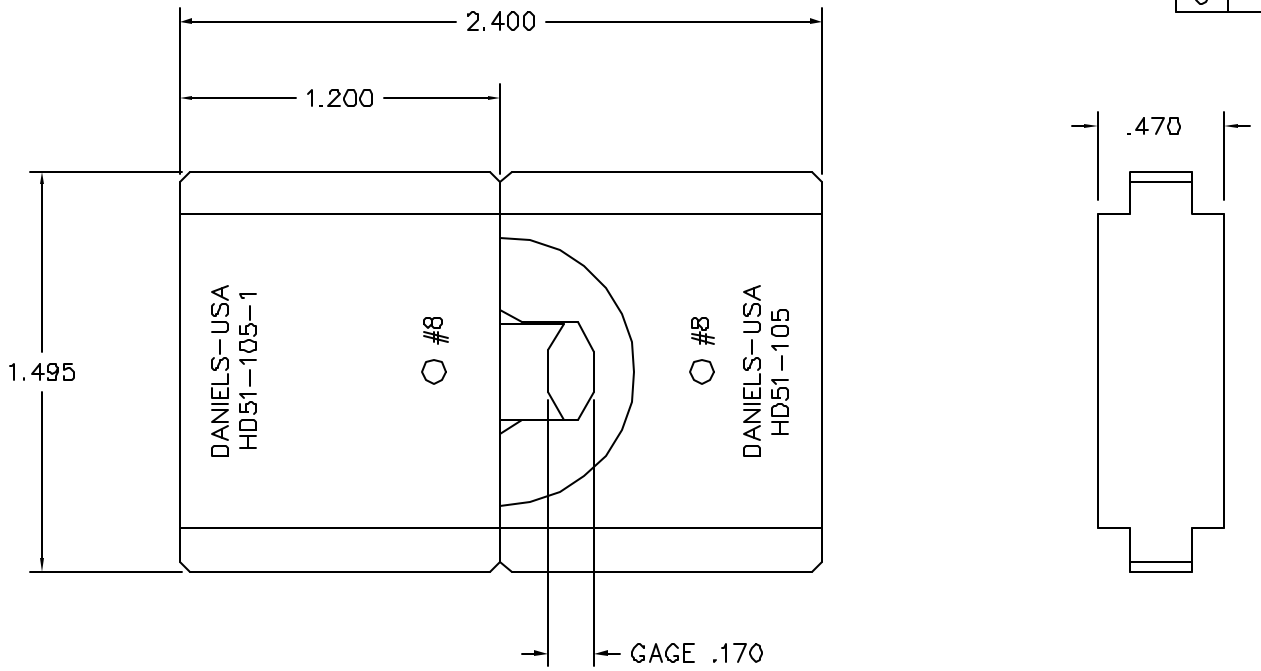

UNCONTROLLED DOCUMENT WILL NOT BE UPDATED

NOTES:

1. USE FOR SIZE #8 INSULATED TERMINALS.

RESTRICTED & CONFIDENTIAL

CONFIDENTIAL PROPERTY OF DANIELS MANUFACTURING CORP. NOT TO BE DISCLOSED TO OTHERS, REPRODUCED OR USED FOR ANY OTHER PURPOSE, EXCEPT AS AUTHORIZED IN WRITING BY DANIELS MANUFACTURING. MUST BE RETURNED TO DANIELS MANUFACTURING CORP. ON COMPLETION OF ORDER OR OTHER PURPOSE FOR WHICH LENT.

DO NOT SCALE DRAWING

MATERIAL

HEAT TREAT

FINISH

ITEM	PART NO.	QTY.	DESCRIPTION/REMARKS

DRN. D. CAD	DATE 8/12/94	DANIELS MANUFACTURING CORP. ORLANDO, FLORIDA CAGE 11851
CHK'D. DE	DATE 8/94	
APP'D.	DATE	TITLE DIE SET ENVELOPE DRAWING
APP'D.	DATE	WHERE USED:

SIZE	SCALE	CAD P/N	SHEET	OF
B	2X	HD51-105-ENV	1	1

POSTING	P/N	REV.
	HD51-105-ENV	3