DRAWING NO.
SE206116

REV.	DATE	DESCRIPTION	ECO	BY	C'K'D.
C	05/28/12	SALES DRAWINGS SE206116-01 & SE206116-02 SHOULD BE COMBINED.	27596	MRA	MB

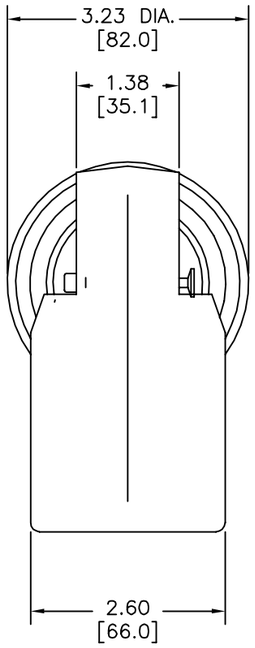

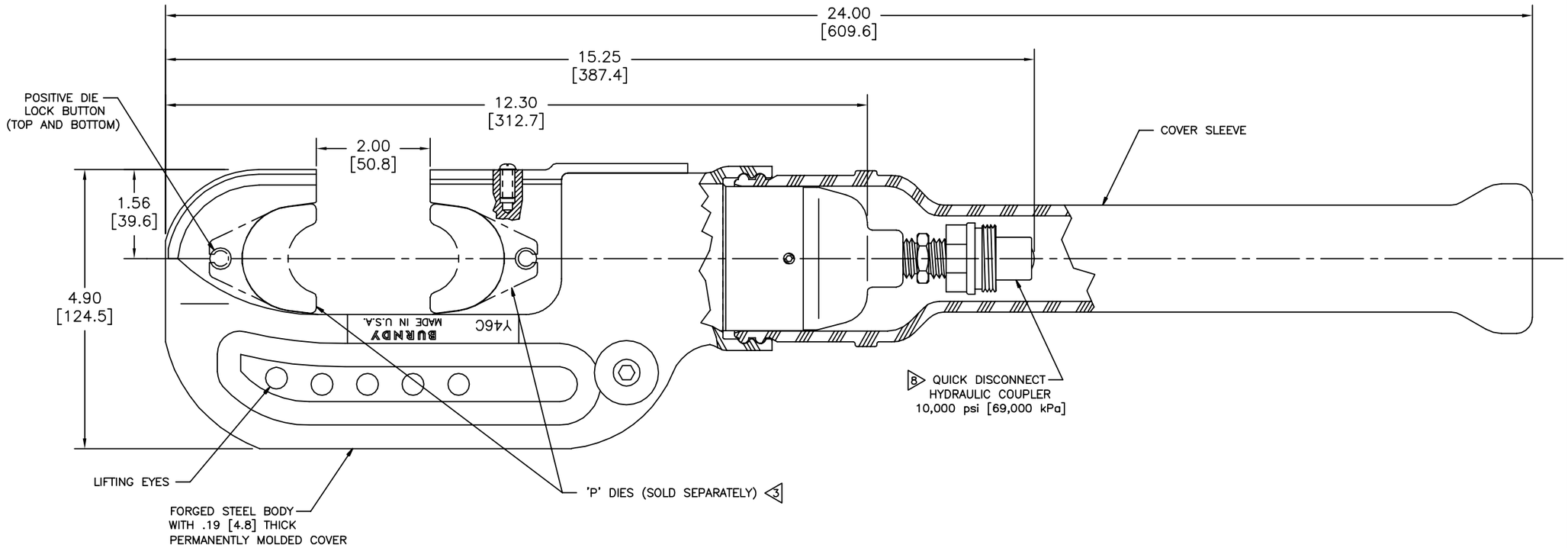

NOTES:

1. SPECIFICATIONS:
   OPERATING FORCE: 15 TONS [133 kN].
   WEIGHT (W/O STEEL CASE): 18 LBS [8.2 kg].

2. SUPPLIED WITH 19.50 X 11.00 X 5.75 [495.30 X 279.40 X 146.05] STELL CASE (NOT SHOWN).

3. ACCEPTS STANDARD 'P' DIES. ALSO ACCEPTS STANDARD 'U' DIES WHEN USED WITH 'P-UADP-1' ADAPTER (SEE NOTE 4).

4. ACCESSORIES:

CAT. NO.	DESCRIPTION
P15K	CABLE CUTTER DIE (MAX CABLE DIA 1.20 [30.5]).
P-UADP-1	'U' DIE ADAPTER.
PT23484	UNIVERSAL HOT STICK ADAPTER.

5. ALL DIMENSIONS SHOWN IN BRACKETS [ ] ARE MILLIMETERS UNLESS OTHERWISE SPECIFIED.

6. FOR NON-COVERED TOOL (Y46) REFER TO DRAWING NUMBER SE206145.

7. IF HIGHEST REVISION OF THIS SALES PRINT IS AFFECTED, UPDATE PRINT WSA208758 TO INCLUDE THE NEW REVISION.

8. CATALOG NO. Y46C IS SUPPLIED WITH A 10,000 psi [69,000 kPa] MALE HYDRAULIC COUPLER AS SHOWN.
   CATALOG NO. Y46C-2 IS SUPPLIED WITH A 10,000 psi [69,000 kPa] FEMALE HYDRAULIC COUPLER NOT SHOWN.
   CATALOG NO. Y46CQD IS SUPPLIED WITH A 10,000 psi [69,000 kPa] MALE QUICK DISCONNECT DRIPLESS HYDRAULIC COUPLER (NOT SHOWN).
   CATALOG NO. Y46C2QD IS SUPPLIED WITH A 10,000 psi [69,000 kPa] FEMALE QUICK DISCONNECT DRIPLESS HYDRAULIC COUPLER (NOT SHOWN).

TO ORDER BURNDY® PRODUCTS CALL

UNITED STATES:
1-800-346-4175 (LONDONDERRY, NH)

CANADA:
1-800-361-6975 (QUEBEC)
1-800-387-6487 (ALL OTHER PROVINCES)

FOR PRODUCT INFO: http://www.burndy.com

Y46 HYDRAULIC CRIMP TOOL

ITEM NO: 433002

CAT NO: Y46C 8

SCALE:	1:1	
DRAWN BY:	M LAROCHELLE	1/14/91
CHECKER:	J LEFAVOUR	3/17/92
DSN APPVL:	J LEFAVOUR	3/17/92
MFG APPVL:	--	--
QC APPVL:	A LLOYD	3/17/92
MKT APPVL:	D HAMILTON	3/17/92
PROD FAM:	--	
PROJECT #:	--	
DOCUMENT TYPE:	Sales	
REL LEVEL:	AutoCAD	

BURNDY®

DRAWING NO	REV
SE206116	C

SIZE: D

SHEET 1 OF 2

DRAWING NO.
SE206116

REV.	DATE	DESCRIPTION	ECO	BY	C'K'D.
C	05/28/12	SALES DRAWINGS SE206116-01 & SE206116-02 SHOULD BE COMBINED.	27596	MRA	MB

*** BILL OF MATERIAL ***

ITEM	PART No.	QTY.	DESCRIPTION
1	PT204334-01	1	HEAD, HYPRESS,™ COVERED
2	433-201717-003	1	CAP, END
3	PT204304-01	1	PISTON
4	PT204305-01	1	HOLDER, DIE
5	PT23415	1	HOLDER, SPRING, UPPER
6	PT23410	1	HOLDER, SPRING, LOWER
7	PT205850-01	1	SPRING, RETURN
8	PT23606	2	PLUG, PLASTIC
9	31CX50LHSCS	2	SCREW, CAP, SKT, LOW HD, 5/16-18 UNC-2A X .50 LG
10	PT10157	2	PIN ASSEMBLY, RELEASE, DIE
11	31FX62SHCS	1	SCREW, CAP, HEAD, SOCKET, 5/16-24 UNF-2A
12	PT94	1	COUPLING, MALE
13	PT11148	1	NIPPLE, HEX, MALE-MALE
14	433-80970-007	2	RING, SEAL, PRESSURE, HIGH
15	25CX75SHCSNY	4	SCREW, CAP, HD, SKT, NYLON INSERT, 1/4-20 UNC-2A
16	433-205851-008	1	RING, WIPER
17	PT6554	1	SCREW, SET, SKT, HEX, NYLON TIP, #10-32 UNF-2A
18	PT10122	1	SLEEVE. HOSE COVER
19	PT10138	1	SAFETY SHIELD
20	PT10141	1	COVERED SCREW
NOT SHOWN	N/A	A/R	EPOXY
NOT SHOWN	ALFU55DRUM	3.5 in^3	OIL, HYDRAULIC
NOT SHOWN	PT209142	1	CASE, TOOL
NOT SHOWN	PT204438-01	1	CARD, WARRANTY, FIVE YEAR
NOT SHOWN	FORM7828	1	MANUAL, CARE, HOSE
NOT SHOWN	Y46MOMI	1	MANUAL, HYPRESS,™ Y46
NOT SHOWN	LABEL FORM NO7663	1	LABEL, CARTON
NOT SHOWN	QDM	1	COUPLING, MALE, DRIPLESS
NOT SHOWN	QDF	1	COUPLING, FEMALE, DRIPLESS

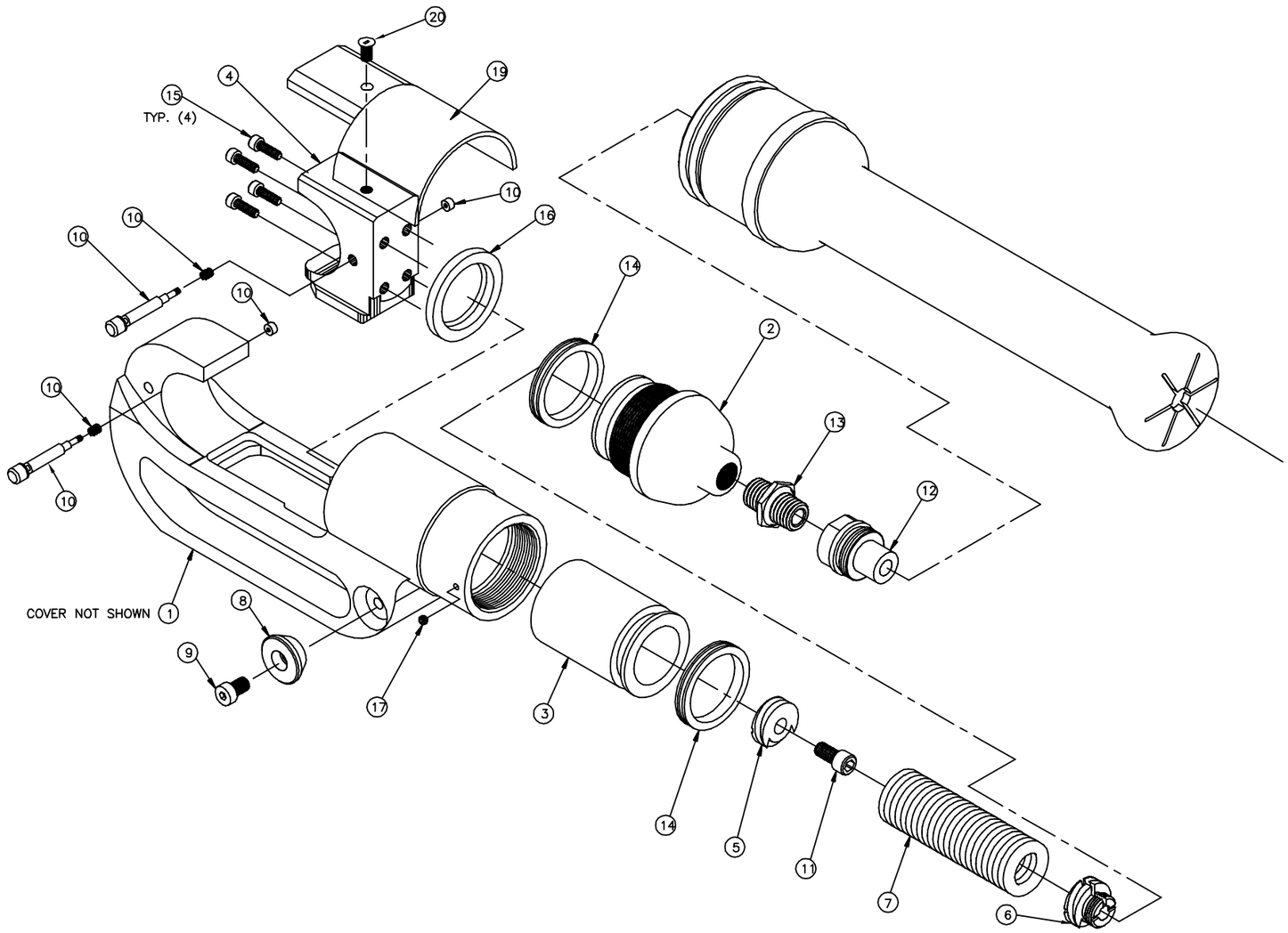

Y46C HYPRESS™

TO ORDER BURNDY® PRODUCTS CALL

UNITED STATES:
1-800-346-4175 (LONDONDERRY, NH)

CANADA:
1-800-361-6975 (QUEBEC)
1-800-387-6487 (ALL OTHER PROVINCES)

FOR PRODUCT INFO: http://www.burndy.com

Y46C HYDRAULIC CRIMP TOOL

ITEM NO: 433002

CAT NO: Y46C ◁8

SCALE:	1:1	
DRAWN BY:	D DOBRINSKI	3/15/92
CHECKER:	J LEFAVOUR	3/17/92
DSN APPVL:	J LEFAVOUR	3/17/92
MFG APPVL:	--	--
QC APPVL:	A LLOYD	3/17/92
MKT APPVL:	M BLAKE	3/17/92
PROD FAM:	--	
PROJECT #:	--	
DOCUMENT TYPE:	Sales	
REL LEVEL:	AutoCAD	

BURNDY®

DRAWING NO	REV
SE206116	C

SIZE: D

SHEET 2 OF 2